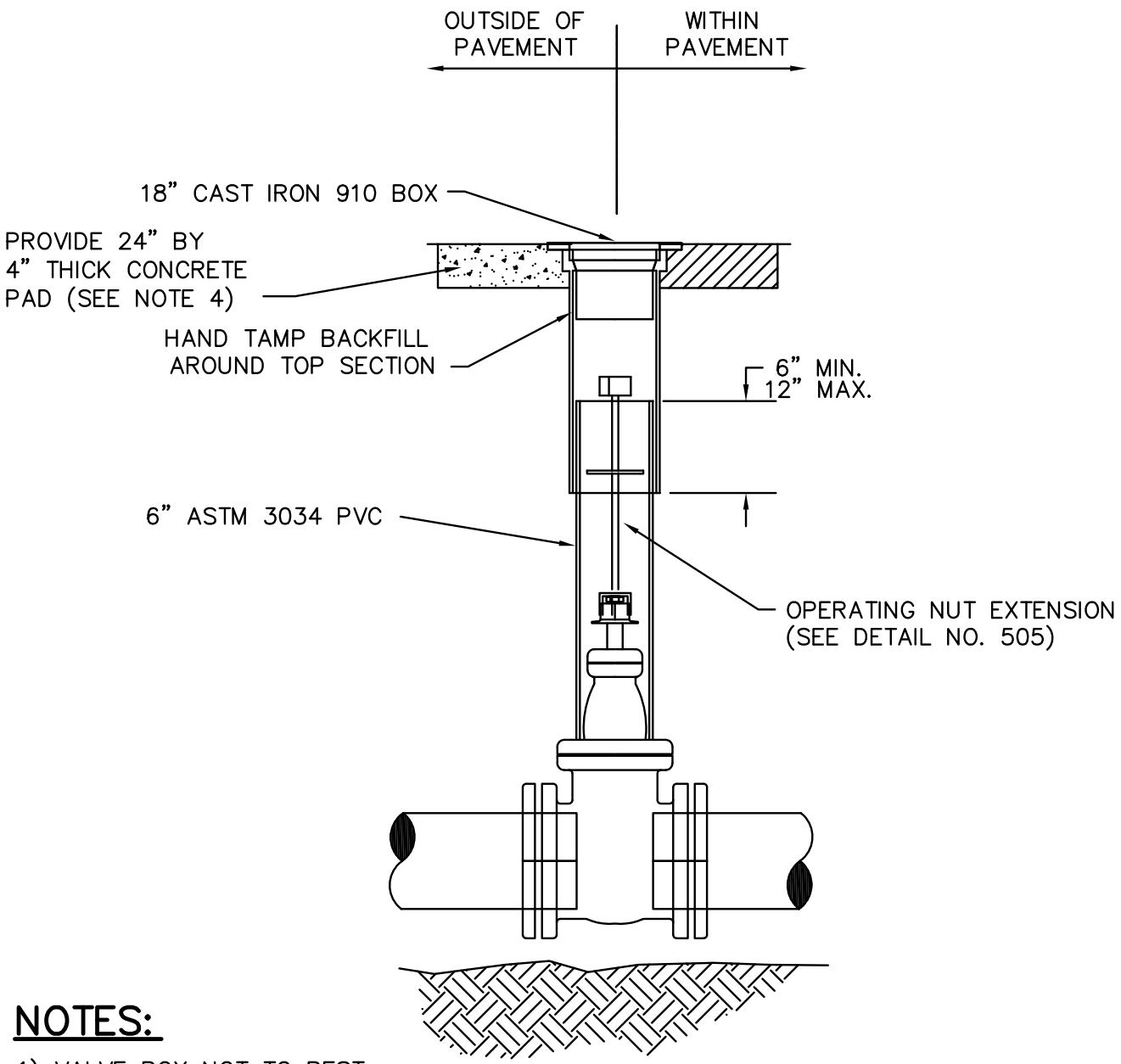

NOTES:

1) VALVE BOX NOT TO REST ON OPERATING ASSEMBLY.
2) OPERATOR EXTENSION REQUIRED WHEN VALVE NUT IS DEEPER THAN 3 FEET FROM FINISHED GRADE.
3) CENTER VALVE BOX ON AXIS OF OPER. NUT.
4) PROVIDE 24" SQUARE BY 4" THICK CONCRETE PAD AROUND VALVE BOX OUTSIDE OF PAVED AREAS AS SHOWN IN CONCRETE PAD DETAIL

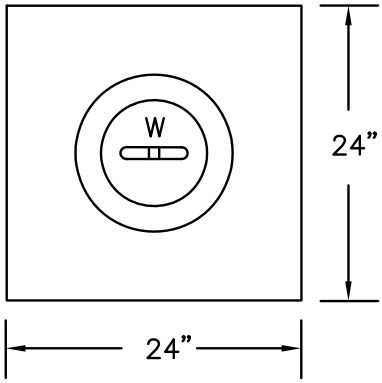

CONCRETE PAD

CITY OF TIGARD
OREGON
ENGINEERING DIVISION
PUBLIC WORKS DEPARTMENT
13125 S.W. HALL BLVD.
TIGARD, OREGON 97223
VOICE: (503) 639-4171
FAX: (503) 684-7297

APPROVED BY:
THEODORE S. KYLE, P.E.
CITY ENGINEER

JANUARY 2011
APPROVAL DATE

TYPICAL GATE VALVE

NO SCALE

DWG. NO.
503

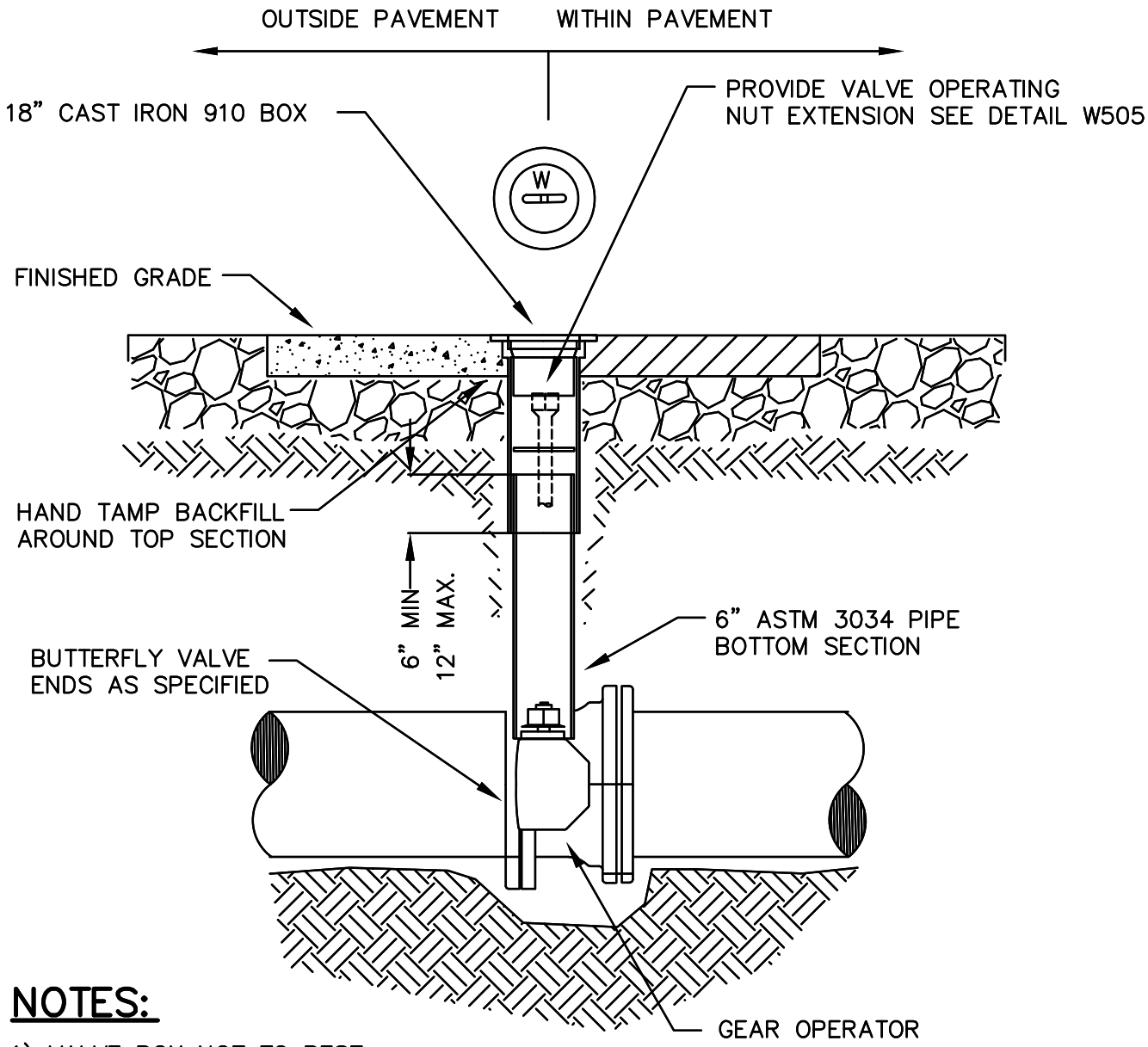

NOTES:

1) VALVE BOX NOT TO REST ON OPERATING ASSEMBLY.
2) OPERATING NUT EXTENSION REQUIRED WHEN VALVE NUT IS DEEPER THAN 3 FEET FROM FINISHED GRADE. SEE DETAIL W5.
3) CENTER VALVE BOX ON AXIS OF OPER. NUT.
4) PROVIDE 24" SQUARE BY 4" THICK CONCRETE PAD AROUND VALVE BOX OUTSIDE OF PAVED AREAS AS SHOWN IN CONCRETE PAD DETAIL

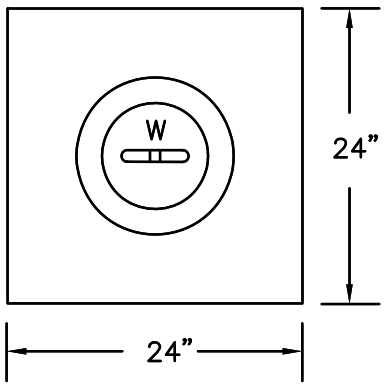

CONCRETE PAD

CITY OF TIGARD
OREGON
ENGINEERING DIVISION
PUBLIC WORKS DEPARTMENT
13125 S.W. HALL BLVD.
TIGARD, OREGON 97223
VOICE: (503) 639-4171
FAX: (503) 684-7297

APPROVED BY:
THEODORE S. KYLE, P.E.
CITY ENGINEER

JANUARY 2011
APPROVAL DATE

TYPICAL BUTTERFLY VALVE

NO SCALE

DWG. NO.
504

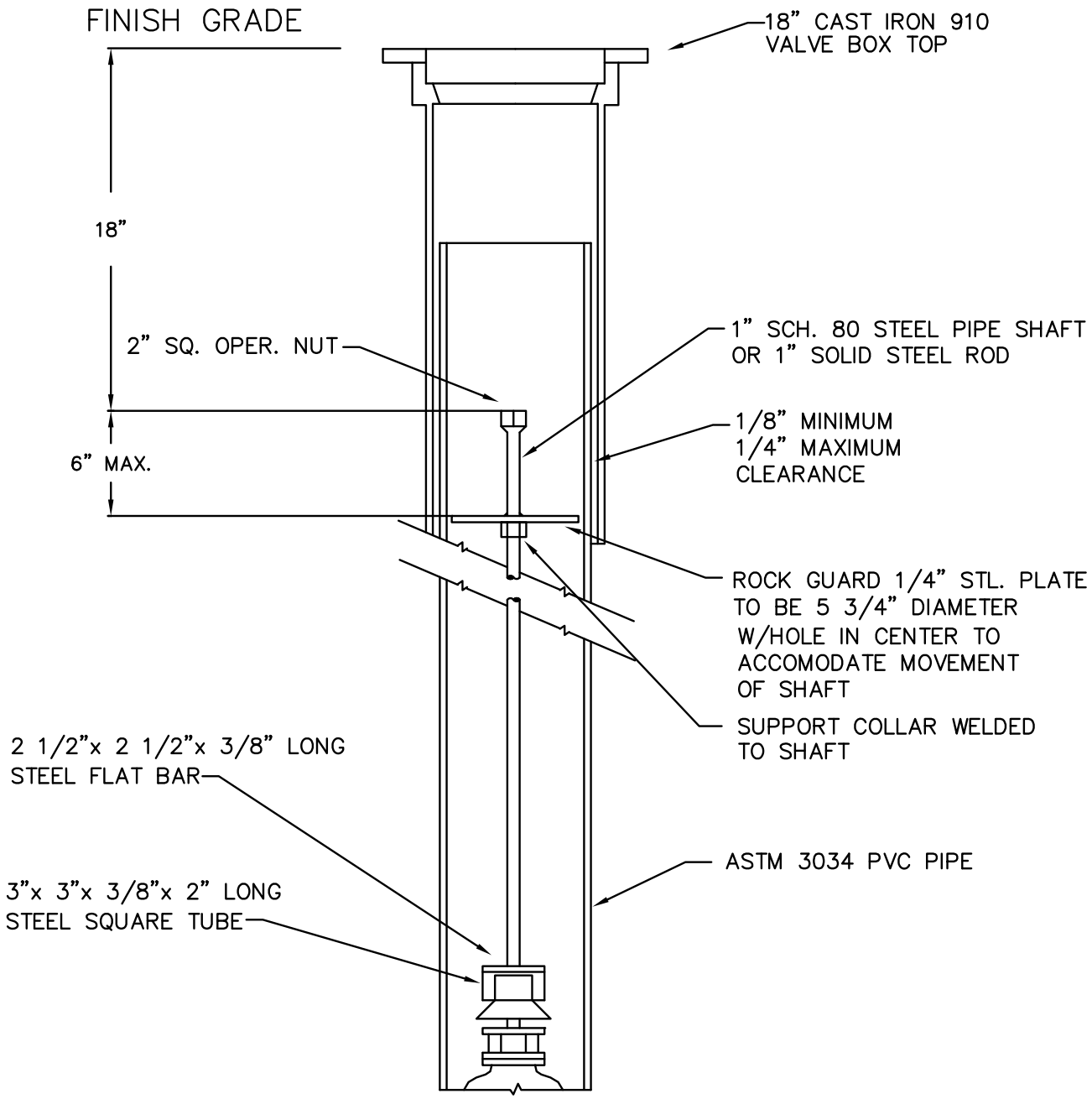

NOTE:

1) EXTEND 2" NUT TO WITHIN 18" OF FINISH GRADE WHEN VALVE NUT IS DEEPER THAN 3 FEET FROM FINISHED GRADE

CITY OF TIGARD
OREGON
ENGINEERING DIVISION
PUBLIC WORKS DEPARTMENT
13125 S.W. HALL BLVD.
TIGARD, OREGON 97223
VOICE: (503) 639-4171
FAX: (503) 684-7297

APPROVED BY:
THEODORE S. KYLE, P.E.
CITY ENGINEER

JANUARY 2011
APPROVAL DATE

OPERATING NUT EXTENSION

NO SCALE

DWG. NO.
505

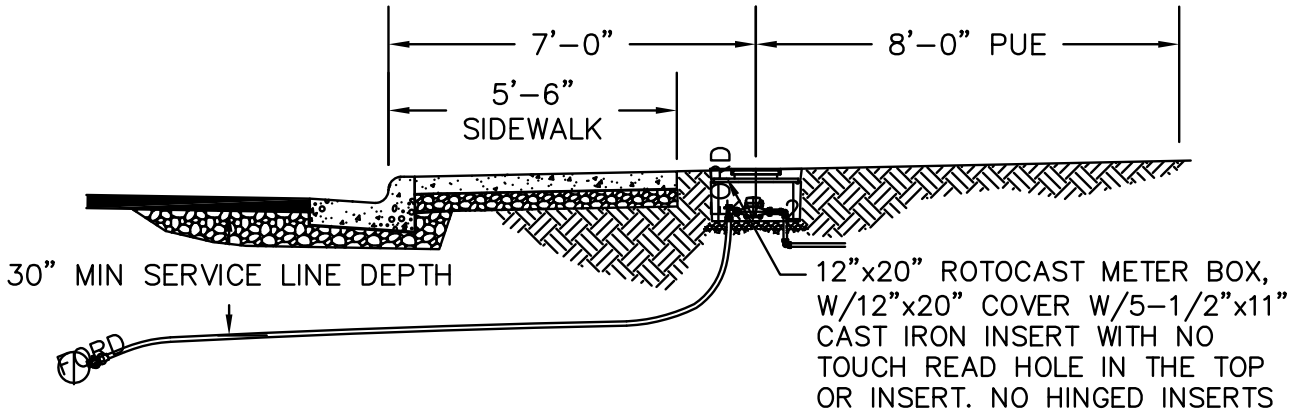

SIDEWALK ADJACENT TO CURB

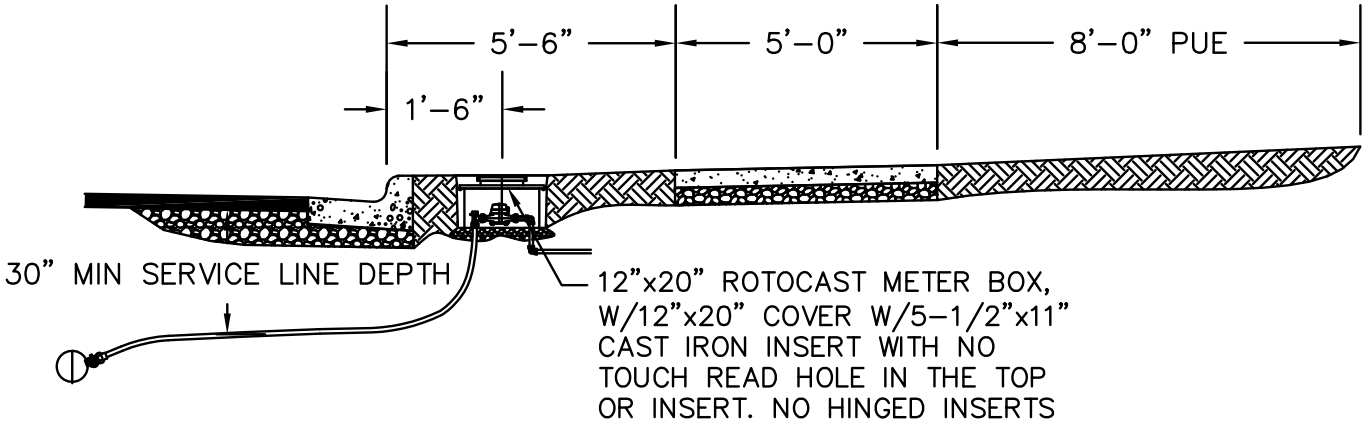

SIDEWALK WITH PLANTER STRIP AT CURB

NOTES:

1. SURVEYOR TO INSTALL TEMPORARY HUB AND GUARD STAKE AT LOT LINE FOR METER INSTALLATION.
2. BOXES SET IN CONCRETE SHALL BE NEXT SIZE LARGER.
3. CENTER OF METER BOX TO BE OFFSET 1' FROM PROPERTY LINE.
4. BANKED METERS WITH SHARED SERVICE LINE TRENCH SHALL HAVE 18" MINIMUM DISTANCE BETWEEN TAP INSTALLATIONS.
5. IF WATER METER IS LOCATED IN A SIDEWALK AREA THE BOX SIZE WILL BE ARMORCAST 17"X30"X12" RPM 20K WITH A ONE PIECE 17"X30 RPM 20K COVER OR EQUIVALENT. IF TWO METERS ARE BANKED IN SIDEWALK AREA THEN DISTANCE BETWEEN ANGLE STOPS WILL BE 24".

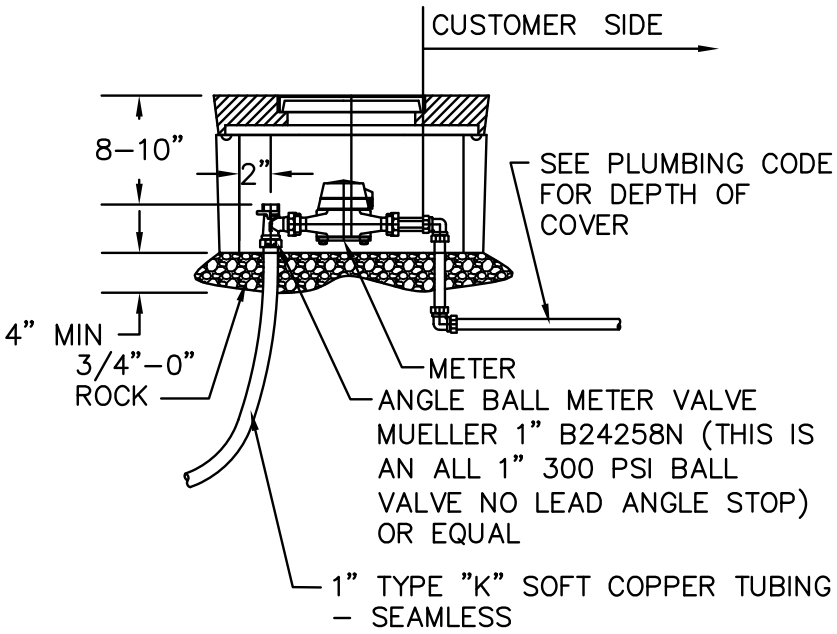

CITY OF TIGARD
OREGON
ENGINEERING DIVISION
PUBLIC WORKS DEPARTMENT
13125 S.W. HALL BLVD.
TIGARD, OREGON 97223
VOICE: (503) 639-4171
FAX: (503) 684-7297

APPROVED BY:
LORI FAHA, P.E.
CITY ENGINEER

MAY 2016
APPROVAL DATE

1" WATER SERVICE

NO SCALE

DWG. NO.
520

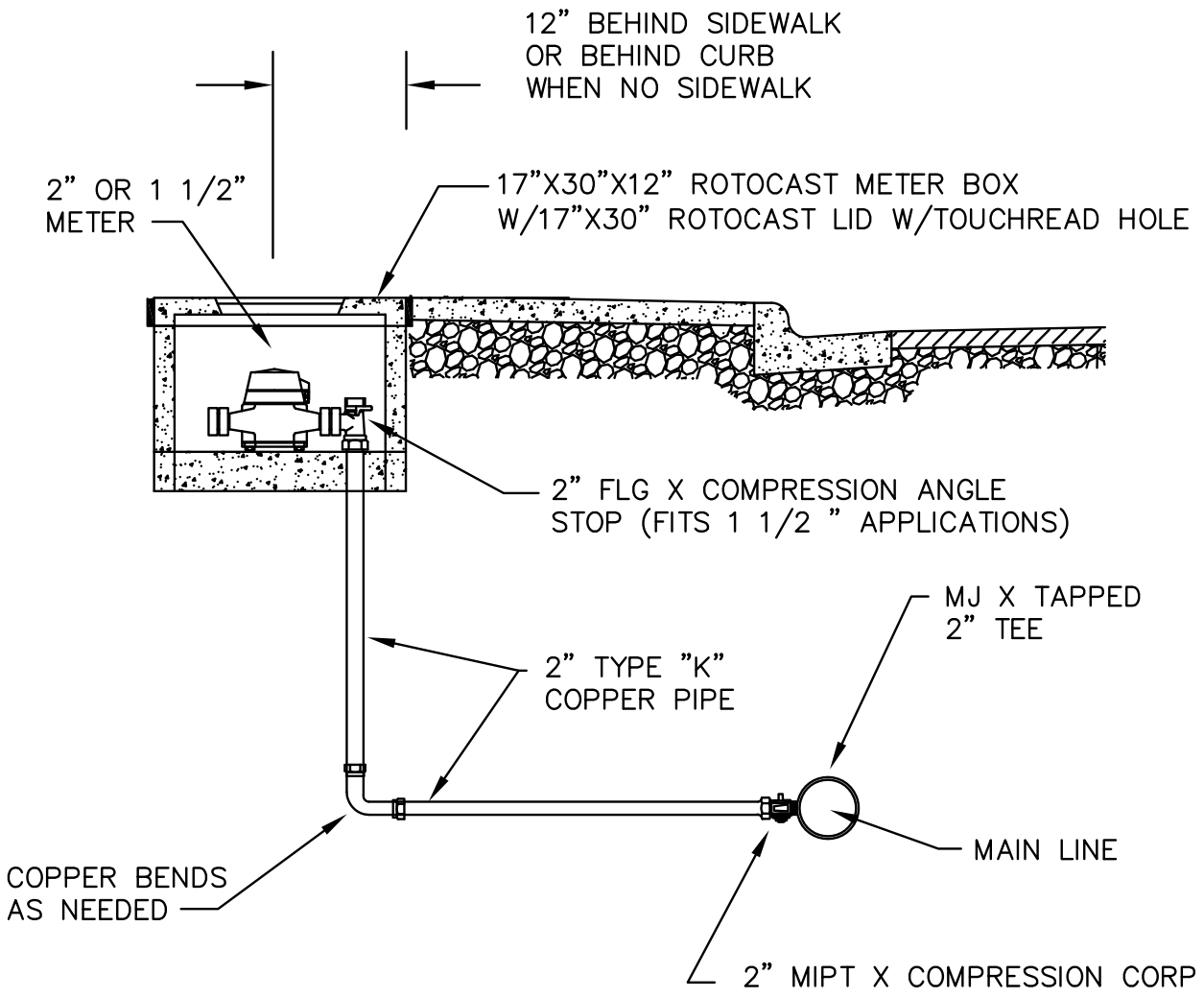

NOTES:

1. CONTRACTOR TO INSTALL MJ X TAPPED 2" TEES AT 90° ANGLES TO METER LOCATIONS. HORIZONTAL & LEVEL.
2. BANKED 2" METERS SHALL HAVE 24" MINIMUM DISTANCE BETWEEN SERVICE TAP INSTALLATIONS
3. IF 2" METER IS LOCATED IN SIDEWALK AREA THE METER BOX NEEDS TO BE 28"X27"X12" ROTOCAST. IF TWO ARE BANKED THEN THE ANGLE STOPS NEED TO BE AT A MINIMUM OF 30" APART.

CITY OF TIGARD OREGON ENGINEERING DIVISION PUBLIC WORKS DEPARTMENT 13125 S.W. HALL BLVD. TIGARD, OREGON 97223 VOICE: (503) 639-4171 FAX: (503) 684-7297	APPROVED BY: THEODORE S. KYLE, P.E. CITY ENGINEER JANUARY 2011 APPROVAL DATE	**2" & 1-1/2"** **WATER SERVICE**	NO SCALE DWG. NO. **521**

CITY OF TIGARD
OREGON
ENGINEERING DIVISION
PUBLIC WORKS DEPARTMENT
13125 S.W. HALL BLVD.
TIGARD, OREGON 97223
VOICE: (503) 639-4171
FAX: (503) 684-7297

APPROVED BY:
THEODORE S. KYLE, P.E.
CITY ENGINEER

JANUARY 2011
APPROVAL DATE

3" & 4" METER

NO SCALE

DWG. NO.
523

STREET SIDE

CUSTOMER SIDE

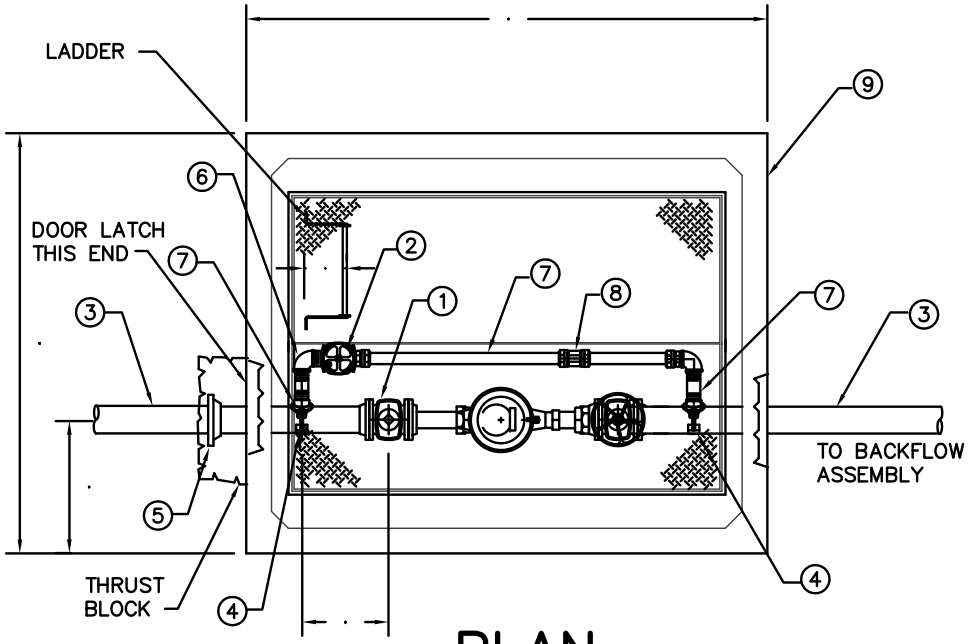

PLAN

ITEM	QTY	DESCRIPTION
1	2EA	4" X 3" FLG X FLG RED & 3" FLG GATE VALVE
		OR
	2	4" X 4" FLG GATE VALVE WITH HANDWHEEL
2	1	2" CORP COMP/COMP
3	2	4' D.I. SPOOL FLG X P.E.
4	2	4" X 2" SADDLE
5	1	4" RETAINER GLAND
6	2	90° SWT X SWT
7	1	2" TYPE "K" COPPER PIPE
8	1	2" COUPLING COMPRESSION
9	1	UTILITY VAULT 675-WA-730 WITH OPENING
		FOR BILCO DOOR JD-3AL AND OSHA
		APPROVED LADDER SEE NOTE NO. 1
10	1	OPTIONAL SUMP PUMP "GRUNDFOS"
		MODEL "THE BOSS 200" 1/3 HP STAINLESS
		STEEL SUMP PUMP WITH FLOAT SWITCH
		AND 1-1/4" DISCHARGE (MISC. PIPING FOR
		DISCHARGE WITH INLINE CHECK VALVE OR APPROVED EQUAL)
11	1	4" PIPE STAND "STANDON"

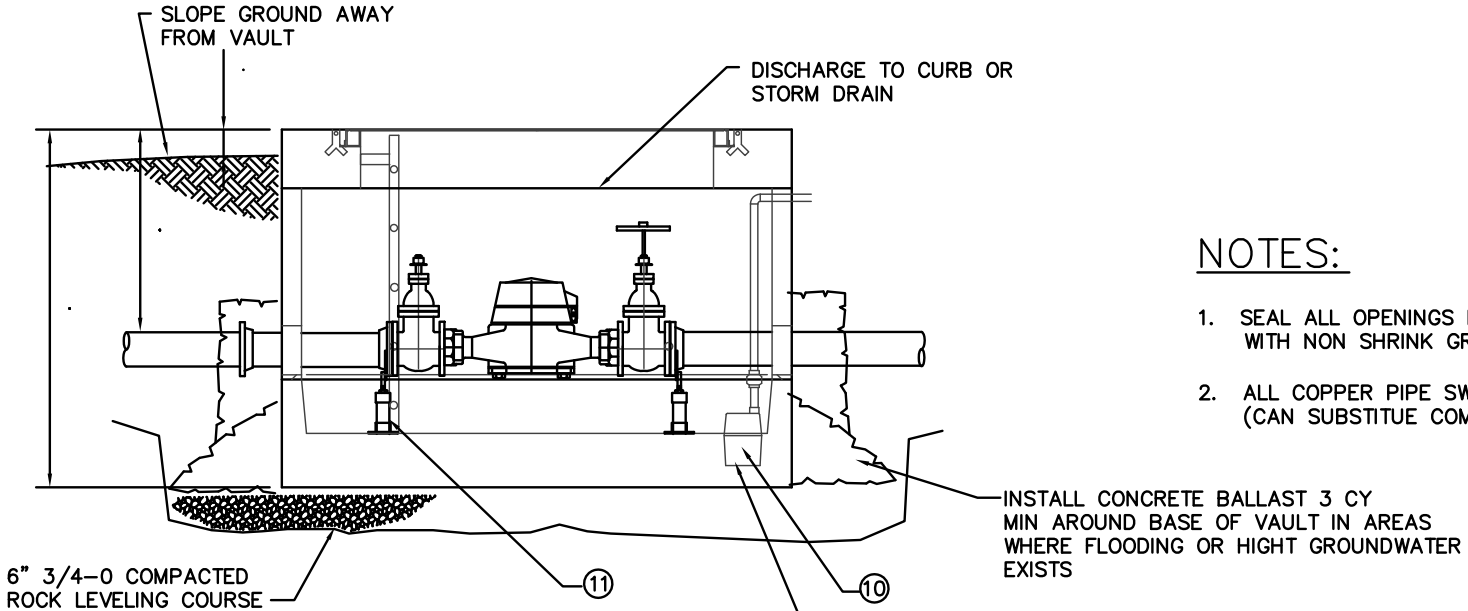

ELEVATION

NOTES:

1. SEAL ALL OPENINGS IN VAULT WITH NON SHRINK GROUT.
2. ALL COPPER PIPE SWEAT JOINTS. (CAN SUBSTITUE COMPRESSION FITTINGS)

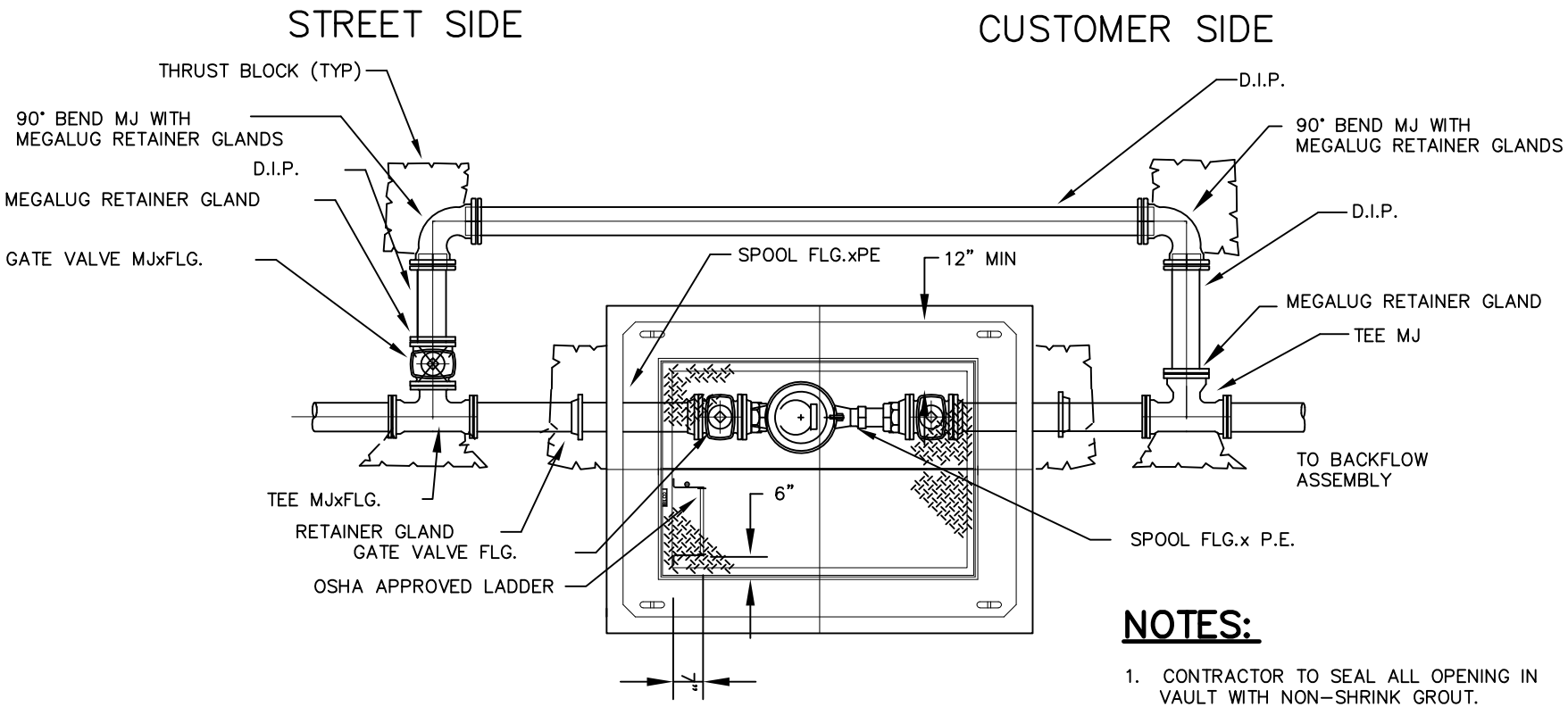

PLAN

NOTES:

1. CONTRACTOR TO SEAL ALL OPENING IN VAULT WITH NON-SHRINK GROUT.
2. CONTRACTOR TO INSTALL CONCRETE BALLAST 3 CU. YD. MIN. AROUND BASE OF VAULT IN THOSE AREAS WHERE FLOODING OR HIGH GROUND WATER EXIST.

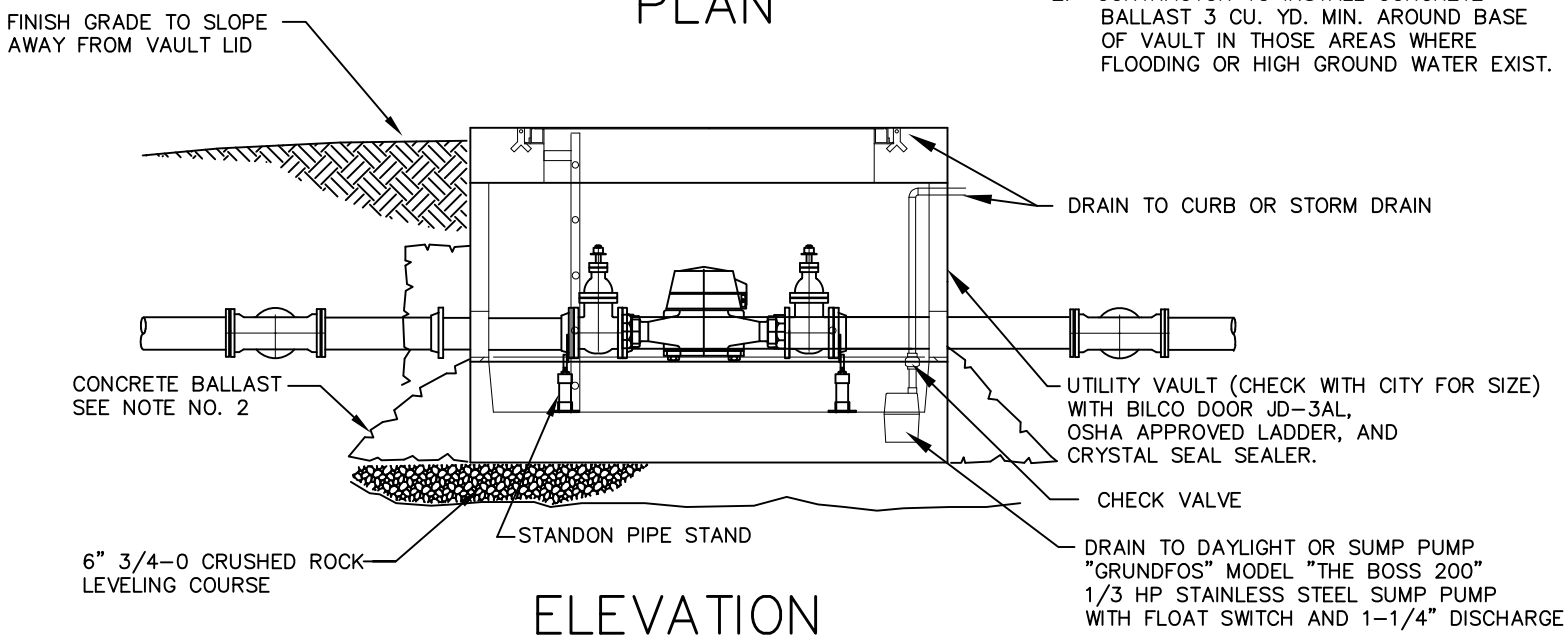

ELEVATION

TIGARD

CITY OF TIGARD
OREGON
ENGINEERING DIVISION
PUBLIC WORKS DEPARTMENT
13125 S.W. HALL BLVD.
TIGARD, OREGON 97223
VOICE: (503) 639-4171
FAX: (503) 684-7297

APPROVED BY:
LORI FAHA, P.E.
CITY ENGINEER

OCTOBER 2016
APPROVAL DATE

LARGE METER W/BYPASS

NO SCALE

DWG. NO.
525

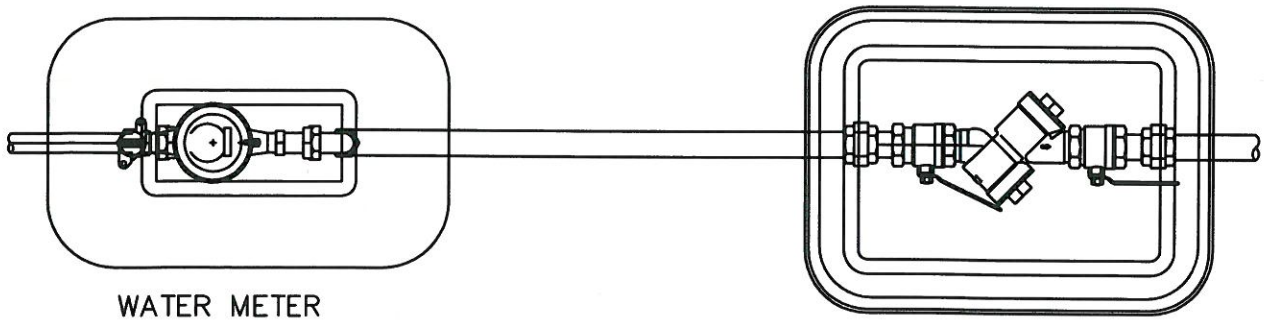

PLAN

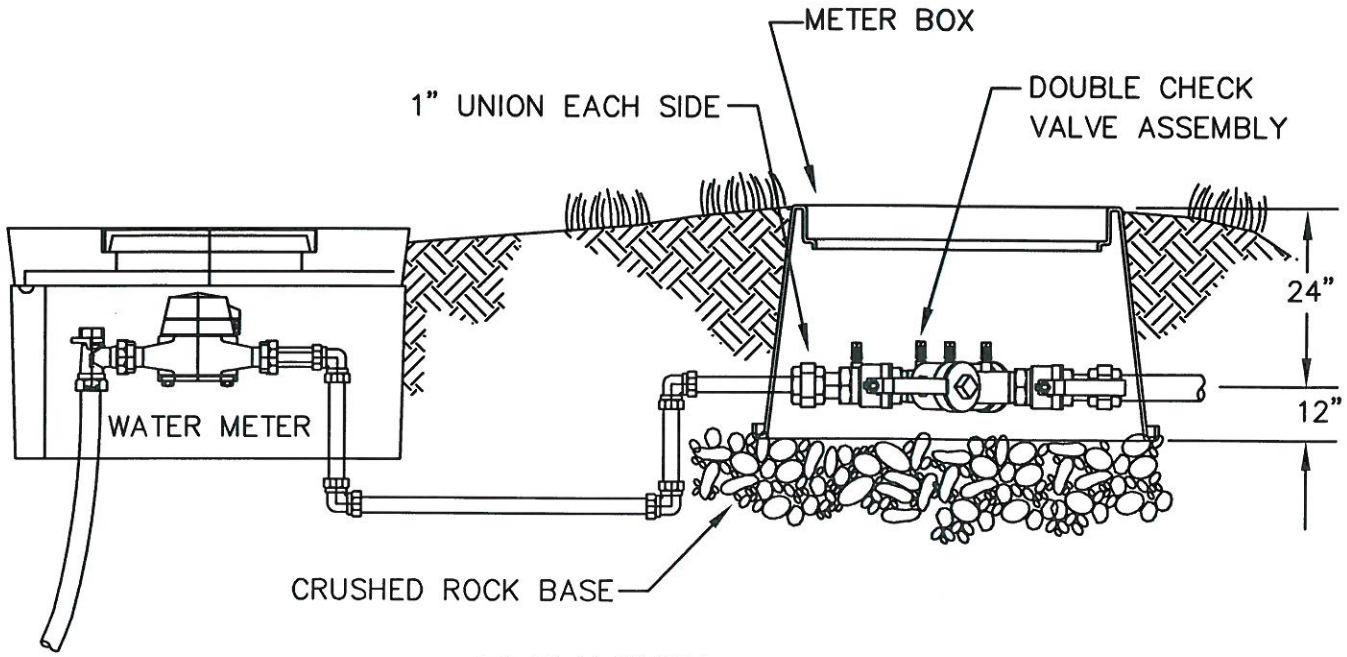

ELEVATION

BOX SPECIFICATIONS	
DEVICE SIZE	BOX TYPE
3/4" – 1"	BROOKS #1419 SERIES OR EQUAL
1 1/2" – 2"	CARSON 1730D P15L OR EQUAL

INSTALLATION SHOWN IS ONLY A SUGGESTION.

1. DOUBLE CHECK TO BE LOCATED DIRECTLY BEHIND WATER METER.
2. BRASS, STAINLESS, OR PLASTIC PLUGS TO BE INSTALLED IN TEST COCKS IF BELOW GROUND INSTALLATION.
3. DISTANCE FROM BOTTOM OF DEVICE TO FINISH GRADE, FREEZE PROTECTION, AND CLEARENCE FOR TESTING AND REPAIR ARE THE MAJOR CONSIDERATIONS FOR INSTALLATION.

CITY OF TIGARD
OREGON
ENGINEERING DIVISION
PUBLIC WORKS DEPARTMENT
13125 S.W. HALL BLVD.
TIGARD, OREGON 97223
VOICE: (503) 639-4171
FAX: (503) 684-7297

APPROVED BY:
LORI FAHA, P.E.
CITY ENGINEER

JANUARY 2011
APPROVAL DATE

DOUBLE CHECK ASSEMBLY

NO SCALE

DWG. NO.
530

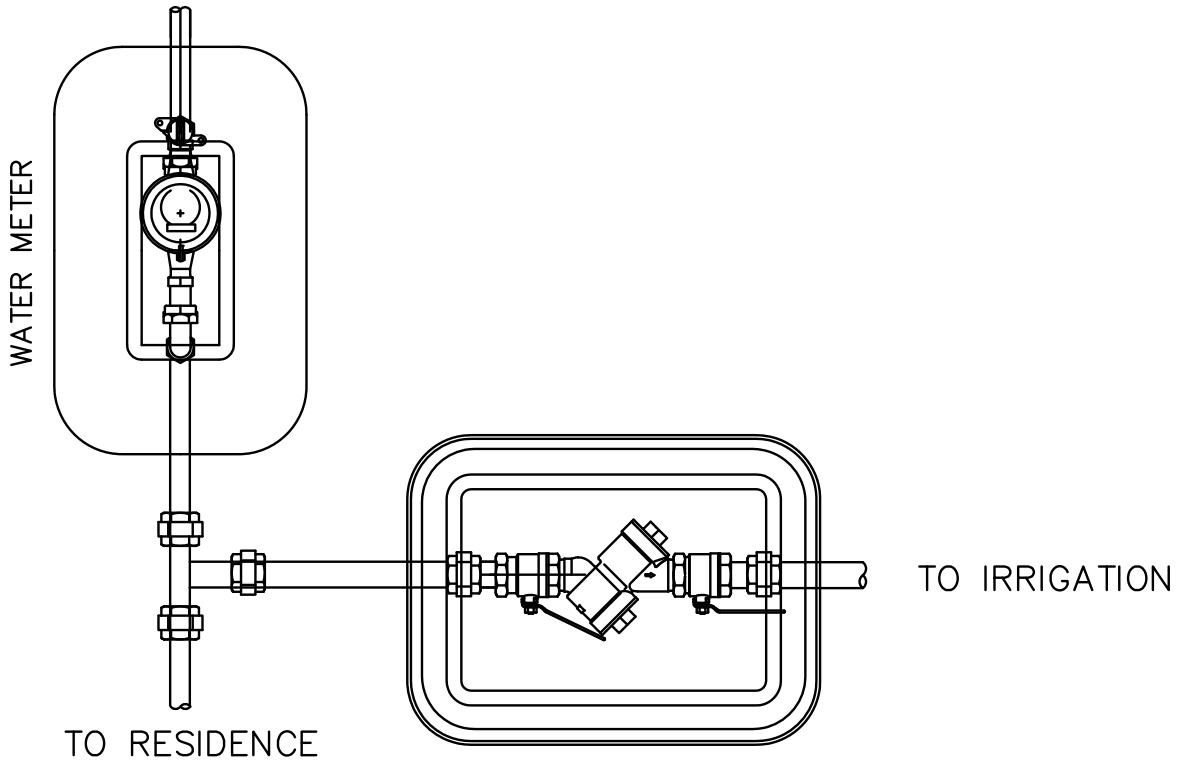

PLAN

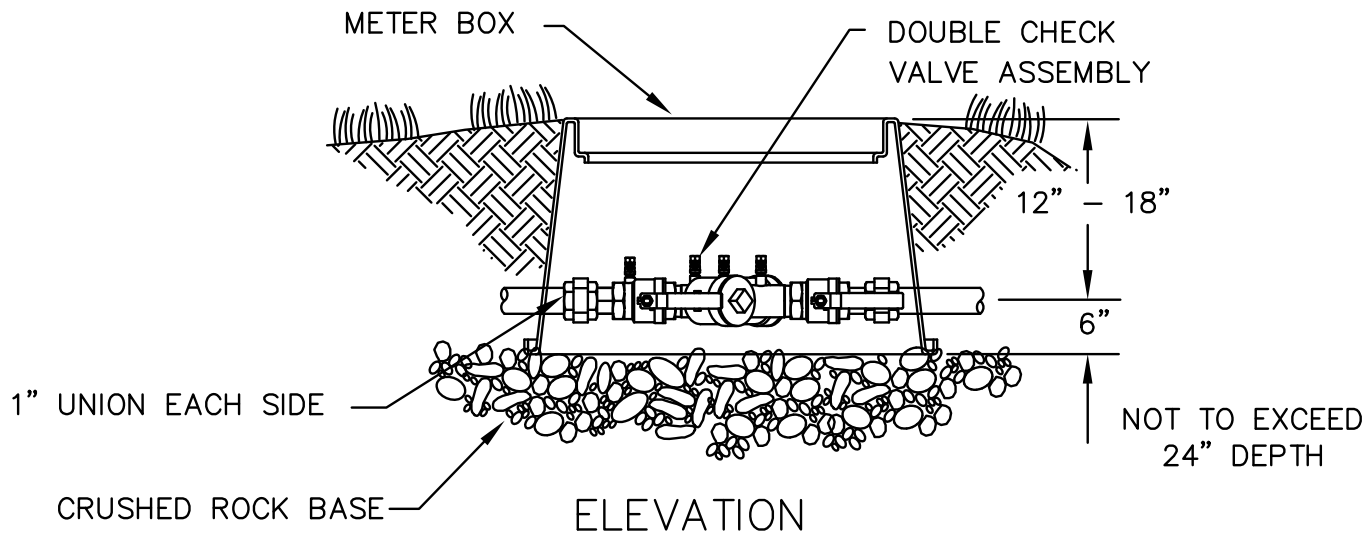

ELEVATION

INSTALLATION SHOWN IS ONLY A SUGGESTION.

1. DOUBLE CHECK TO BE LOCATED DIRECTLY BEHIND WATER METER.

2. BRASS, STAINLESS, OR PLASTIC PLUGS TO BE INSTALLED IN TEST COCKS IF BELOW GROUND INSTALLATION.

3. DISTANCE FROM BOTTOM OF DEVICE TO FINISH GRADE, FREEZE PROTECTION, AND CLEARENCE FOR TESTING AND REPAIR ARE THE MAJOR CONSIDERATIONS FOR INSTALLATION.

CITY OF TIGARD
OREGON
ENGINEERING DIVISION
PUBLIC WORKS DEPARTMENT
13125 S.W. HALL BLVD.
TIGARD, OREGON 97223
VOICE: (503) 639-4171
FAX: (503) 684-7297

APPROVED BY:
THEODORE S. KYLE, P.E.
CITY ENGINEER

JANUARY 2011
APPROVAL DATE

IRRIGATION DOUBLE CHECK ASSEMBLY

NO SCALE

DWG. NO.
531

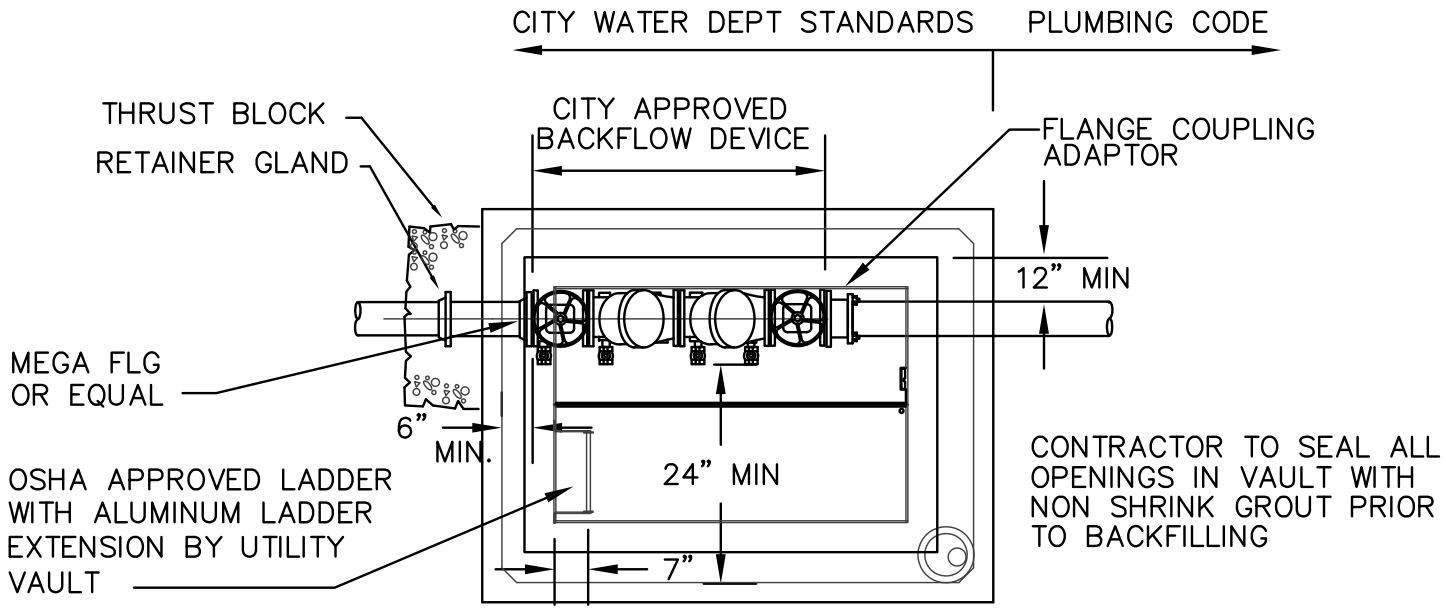

PLAN

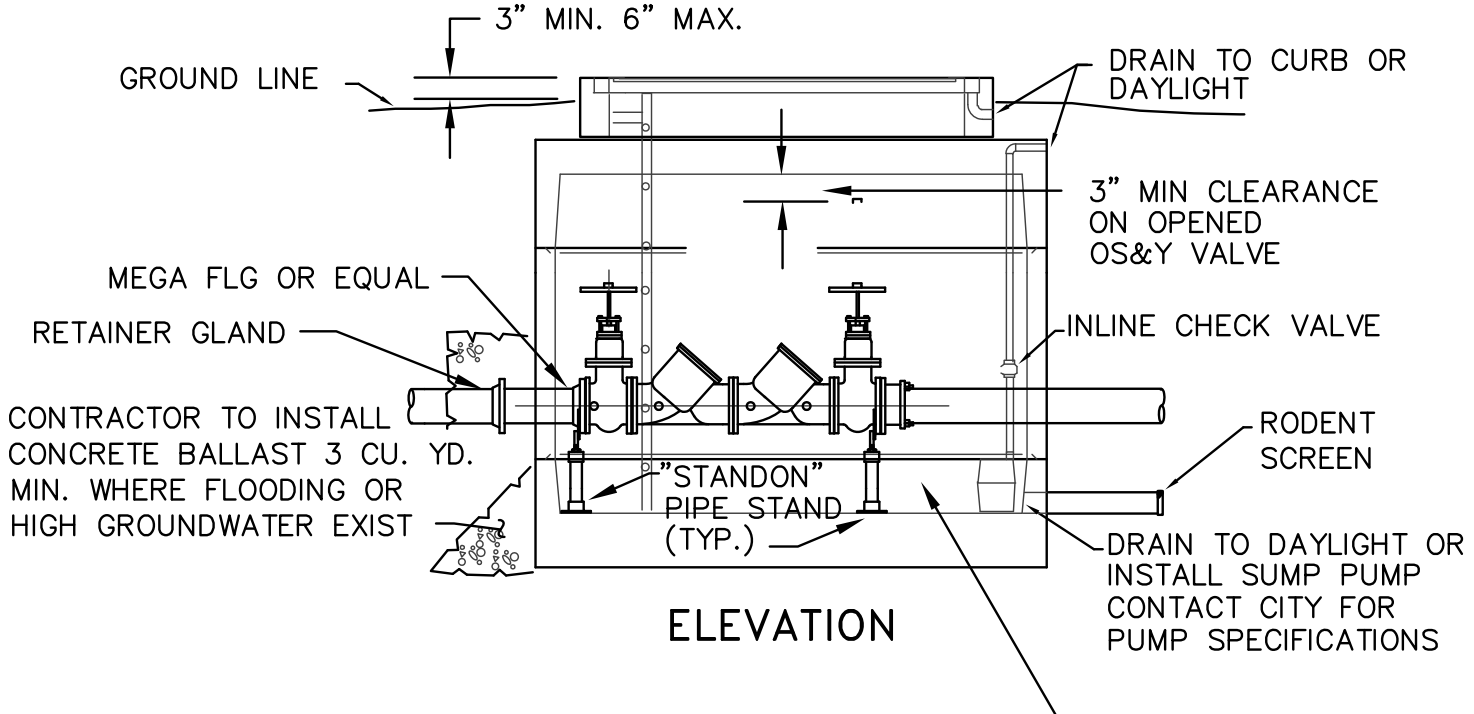

ELEVATION

DOUBLE CHECK VALVE ASSEMBLY

SIZE	UTILITY VAULT OR *EQUAL	BILCO DOOR OR *EQUAL
3	660-WA	J-5AL
4	577-WA	J-5AL
6	676-WA	J-5AL
8	687-WA	JD-3AL
10	5106-LA	JD-3AL

* CITY ENGINEER APPROVED EQUAL

CITY OF TIGARD
OREGON
ENGINEERING DIVISION
PUBLIC WORKS DEPARTMENT
13125 S.W. HALL BLVD.
TIGARD, OREGON 97223
VOICE: (503) 639-4171
FAX: (503) 684-7297

APPROVED BY:
THEODORE S. KYLE, P.E.
CITY ENGINEER

JANUARY 2011
APPROVAL DATE

DOUBLE CHECK VALVE ASSEMBLY

NO SCALE

DWG. NO.
532

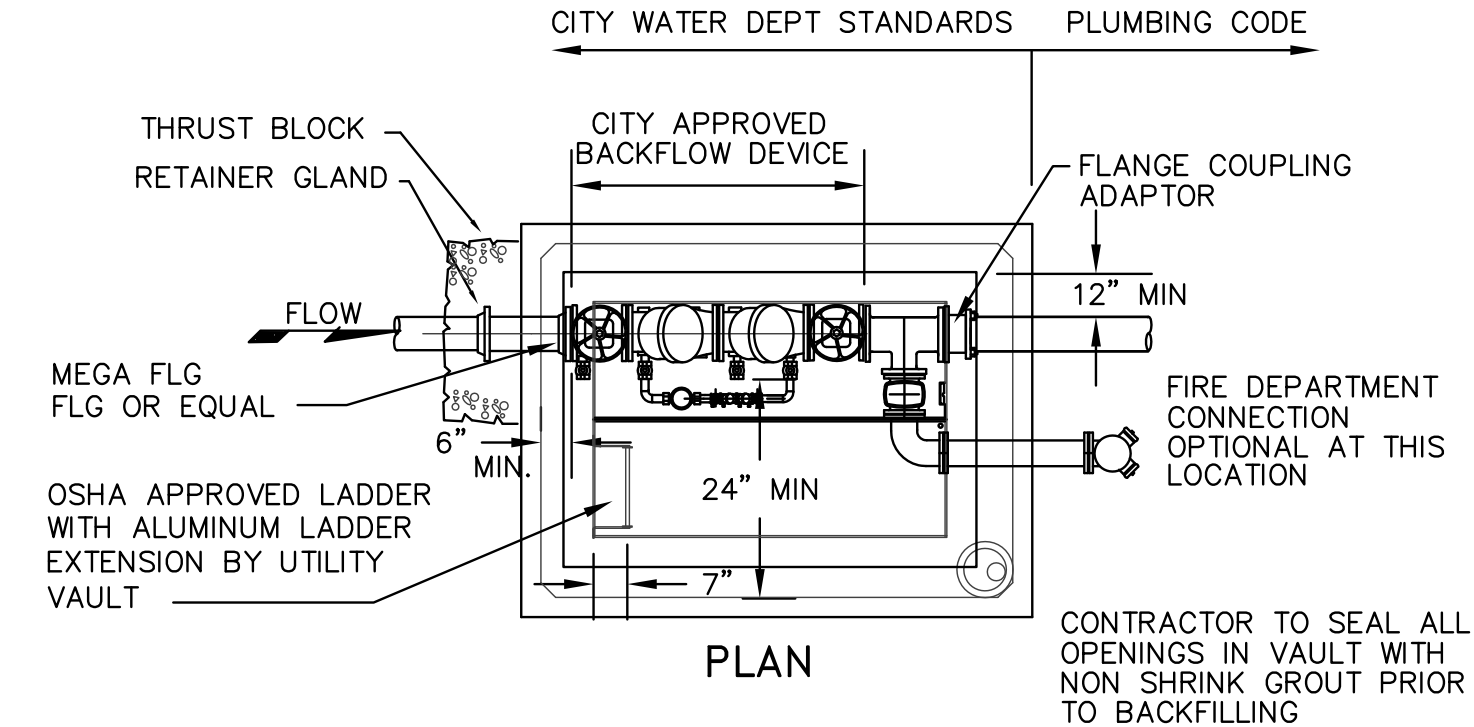

PLAN

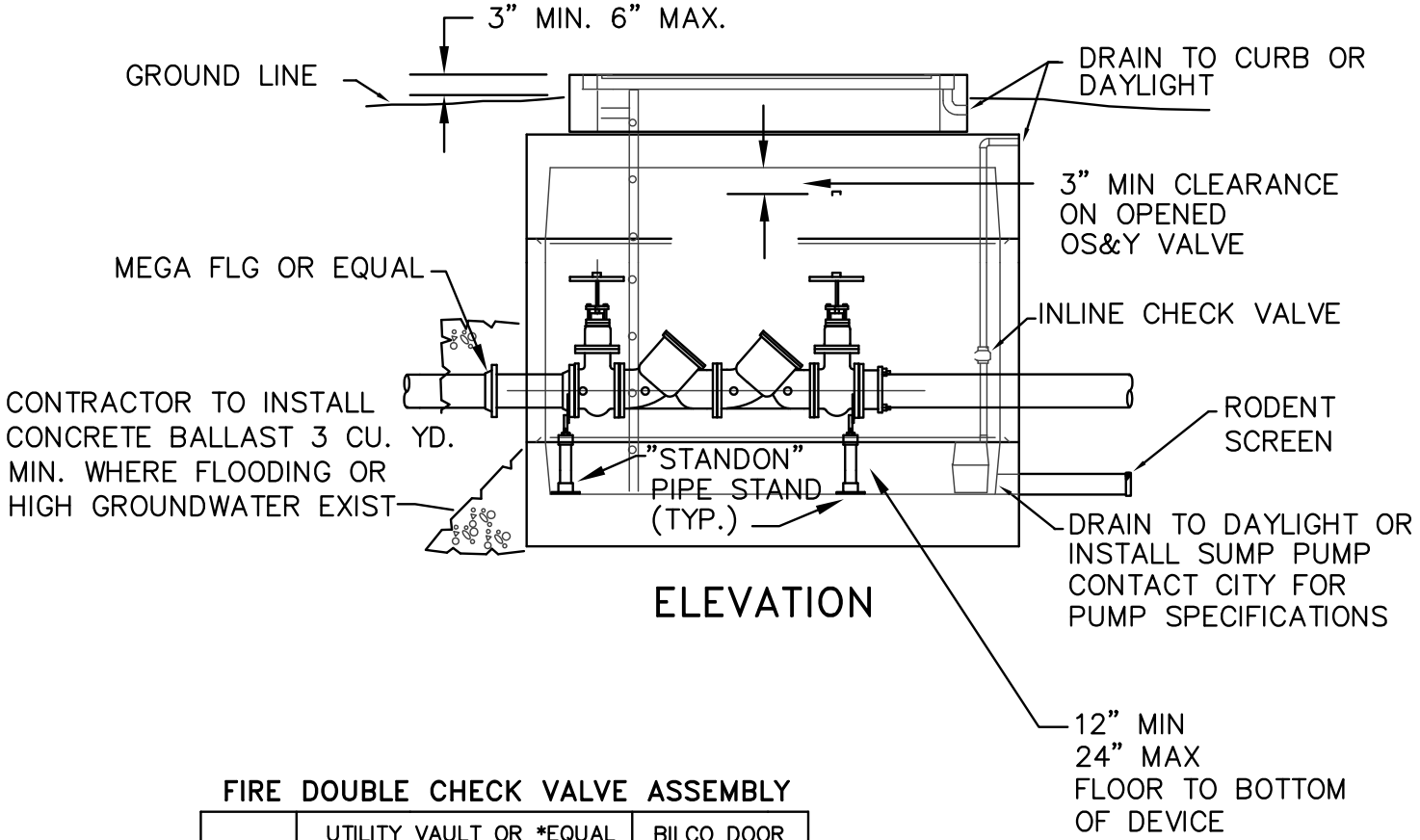

ELEVATION

FIRE DOUBLE CHECK VALVE ASSEMBLY

SIZE	UTILITY VAULT OR *EQUAL		BILCO DOOR OR *EQUAL
	WITH F.D.C.	WITHOUT F.D.C.	
4	676–WA	577–WA	J–5AL
6	687–WA	676–WA	J–5AL
8	5106–LA	687–WA	JD–3AL
10	5106–LA	2106–LA	JD–3AL

* CITY ENGINEER APPROVED EQUAL

CITY OF TIGARD
OREGON
ENGINEERING DIVISION
PUBLIC WORKS DEPARTMENT
13125 S.W. HALL BLVD.
TIGARD, OREGON 97223
VOICE: (503) 639-4171
FAX: (503) 684-7297

APPROVED BY:
THEODORE S. KYLE, P.E.
CITY ENGINEER

JANUARY 2011
APPROVAL DATE

DOUBLE CHECK DETECTOR VALVE ASSEMBLY

NO SCALE

DWG. NO.
533

SIDEWALK ADJACENT TO CURB

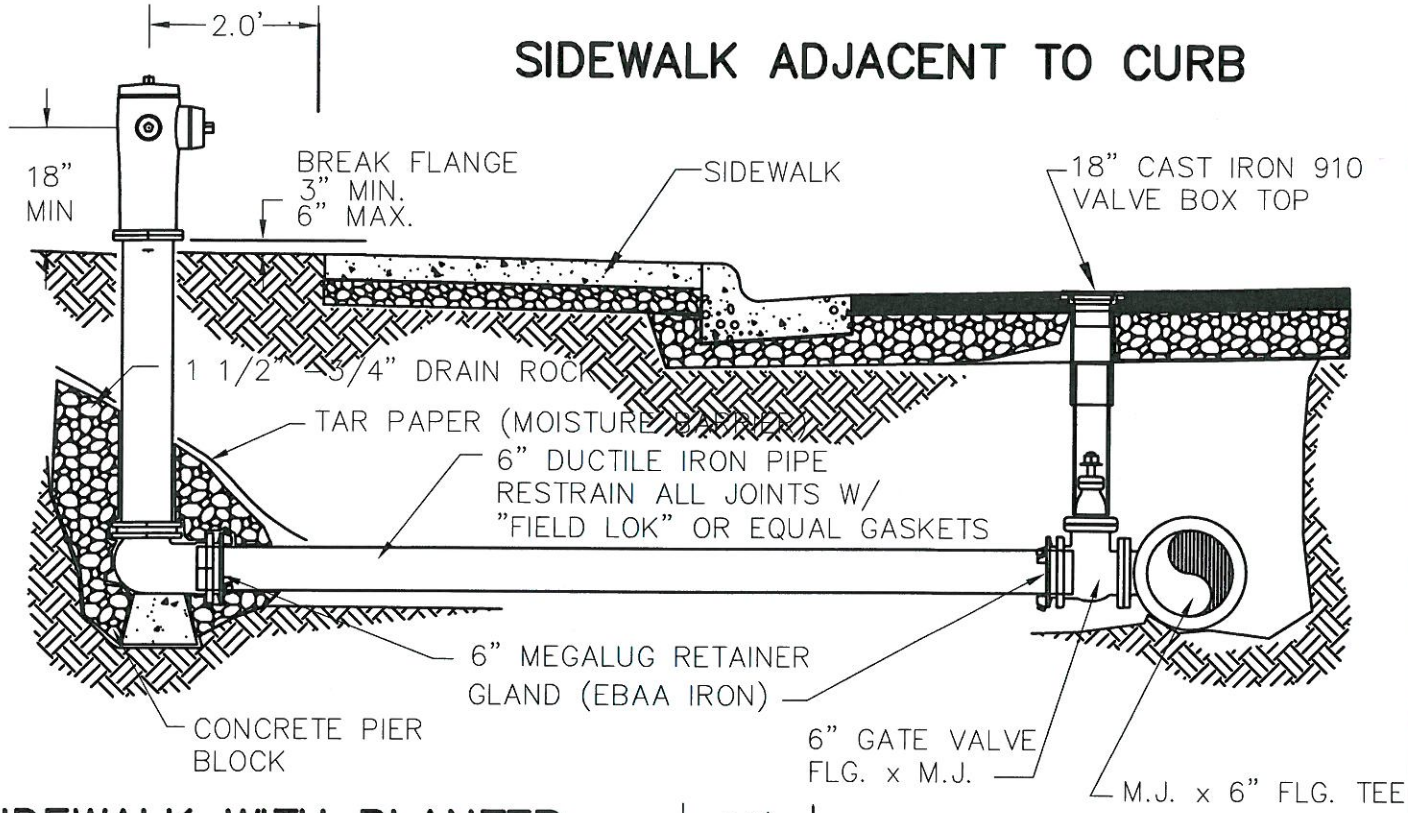

SIDEWALK WITH PLANTER STRIP AT CURB

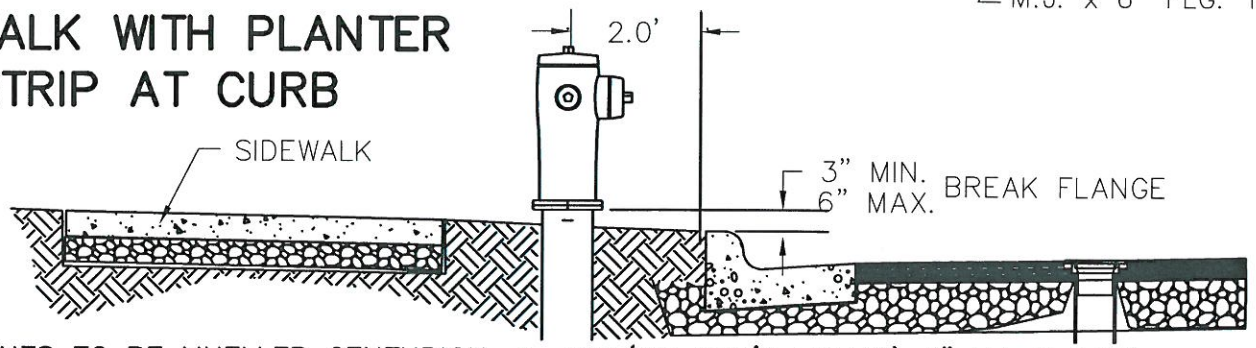

NOTES:

1. HYDRANTS TO BE MUELLER CENTURION, A-423,(OR APP'D EQUAL) 6" MJ, 5 1/4" MVO 3 PORT - TWO 2 1/2" PENTAGON OPERATION NUT, OPEN LEFT WITH THE FOLLOWING:
   A. OIL RESERVOIR
   B. BRONZE ACTUATION NUT
   C. BRONZE SEAT RING
   D. WEATHER SHIELD CAP
   E. SAFETY SLEEVE COUPLING
   F. THREADED NOZZLES WITH "O" RINGS
   G. NATIONAL STANDARD THREADS
2. SAFETY CHAINS TO BE REMOVED.
3. HYDRANTS TO BE PAINTED USING R-1317 SAFETY YELLOW OR AN ALTERNATE APPROVED BY DISTRICT FIRE MARSHALL.
4. HYDRANT TO BE INSTALLED TRUE AND PLUMB.
5. NO OBSTRUCTIONS WITHIN 3' 0" RADIUS OF HYDRANT.
6. IF SUBJECT TO VEHICLE DAMAGED, PROTECTIVE POST TO BE PROVIDED.
7. VALVE BOX TO BE IN ACCORDANCE WITH STANDARD DRAWING NO. 503 OR AS APPROVED BY ENGINEER.
8. THRUST BLOCKS SHALL NOT BE PLACED AT HYDRANT LOCATIONS.
9. INSTALL A STORZ HPHA50-45NH PERMANENT HYDRANT ADAPTER (OR EQUIVALENT) ON THE 4 1/2" PORT.

CITY OF TIGARD OREGON ENGINEERING DIVISION PUBLIC WORKS DEPARTMENT 13125 S.W. HALL BLVD. TIGARD, OREGON 97223 VOICE: (503) 639-4171 FAX: (503) 684-7297	APPROVED BY: LORI FAHA, P.E. CITY ENGINEER AUGUST 2015 APPROVAL DATE	FIRE HYDRANT ASSEMBLY	NO SCALE DWG. NO. 542

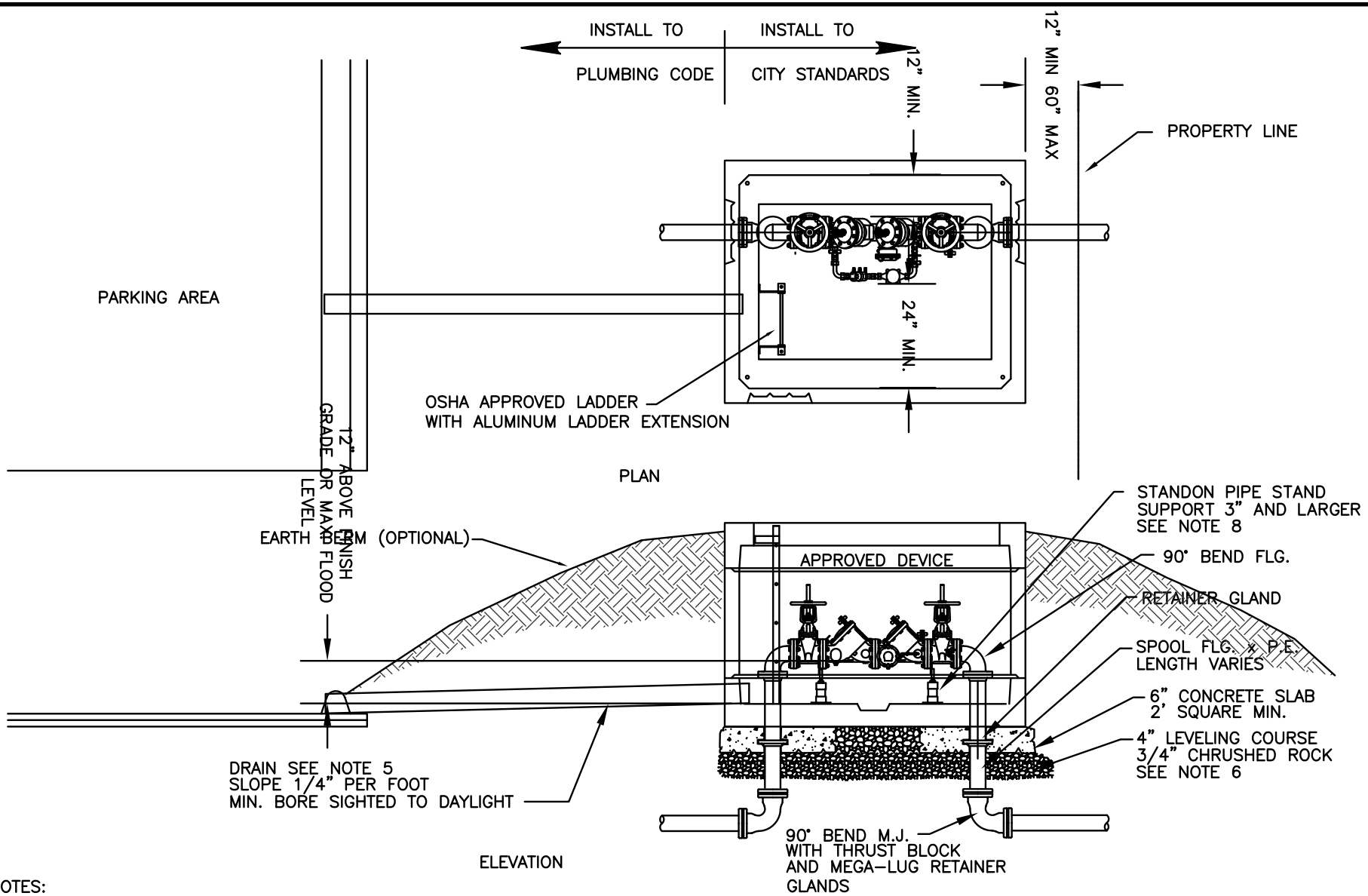

NOTES:

1. REDUCED PRESSURE BACKFLOW ASSEMBLY SHALL BE INSTALLED IN A LOCATION APPROVED BY CITY
2. REDUCED PRESSURE BACKFLOW ASSEMBLY SHALL BE INSTALLED HORIZONTAL AND PLUMB.
3. ALL CLEARENCES APPLY TO OUTSIDE, IN-BUILDING, AND VAULT INSTALLATIONS.
4. TO BE INSULATED AND/OR HAVE A HEAT SOURCE TO KEEP ENCLOSURE AT 40°F (NFPA 13-4-5.4.1.1).
5. ENCLOSURE SHALL INCLUDE A BORE SIGHTED DRAIN TO DAYLIGHT CAPABLE OF DRAINING A FULL RELIEF VALVE DISCHARGE SEE DETAIL 557.
6. 4" 3/4"-0" COMPACTED GRAVEL LEVELING COURSE
7. A BILCO DOOR OR OTHER APPROVED ACCESS SHALL BE PROVIDED.
8. ALL ASSEMBLIES 2 1/2" AND LARGER SHALL BE FLANGED
9. ALL STRUCTURES TO COMPLY WITH LOCAL BUILDING CODES.
10. OPENINGS IN BOTTOM OF VAULT TO BE PRE-FORMED KNOCKOUTS
11. DETECTOR METER TO READ IN CUBIC FEET

CITY OF TIGARD
OREGON
ENGINEERING DIVISION
PUBLIC WORKS DEPARTMENT
13125 S.W. HALL BLVD.
TIGARD, OREGON 97223
VOICE: (503) 639-4171
FAX: (503) 684-7297

APPROVED BY:
THEODORE S. KYLE, P.E.
CITY ENGINEER

JANUARY 2011
APPROVAL DATE

REDUCED PRESSURE DETECTOR BACKFLOW ASSEMBLY

2-1/2" - 10" (BELOW GROUND)

NO SCALE

DWG. NO. 550

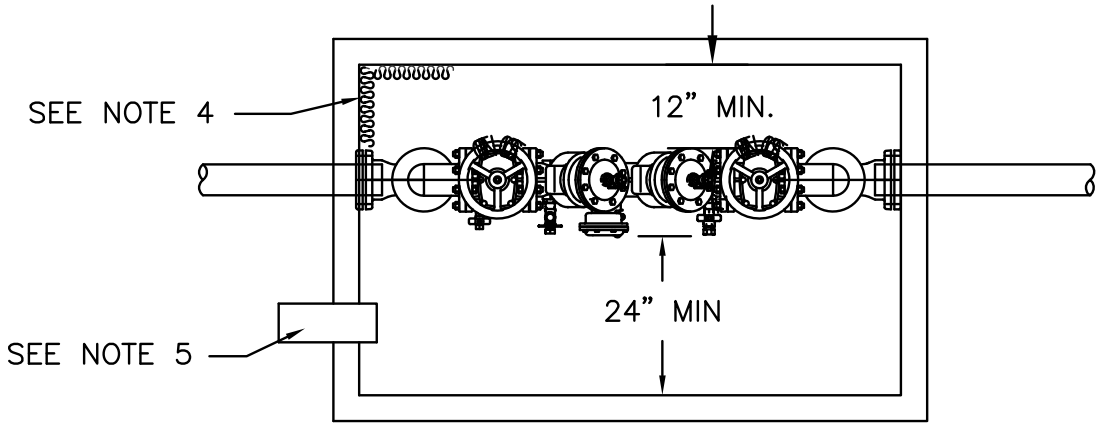

PLAN

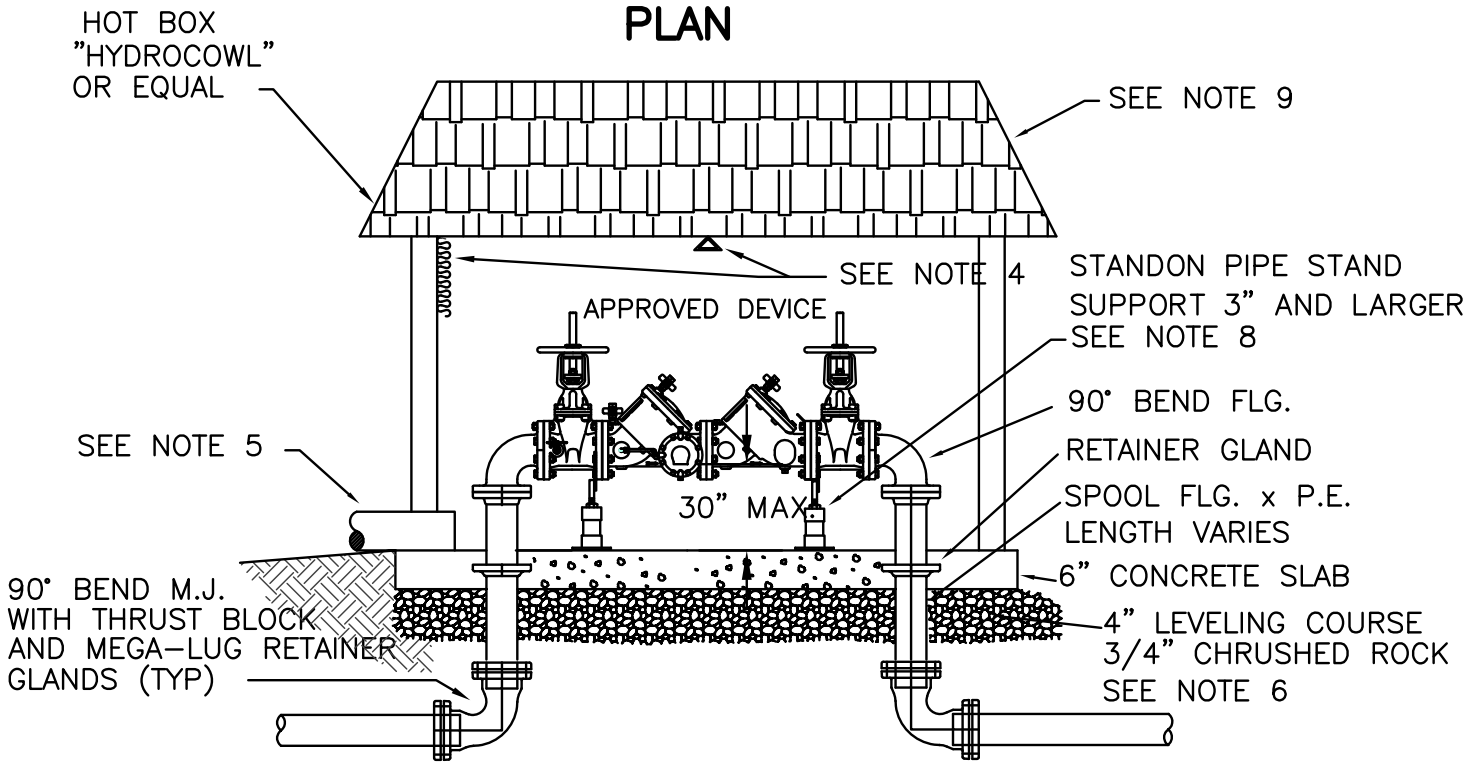

ELEVATION

NOTES:

1. REDUCED PRESSURE BACKFLOW ASSEMBLY SHALL BE INSTALLED IN A LOCATION APPROVED BY CITY OF TIGARD.
2. REDUCED PRESSURE BACKFLOW ASSEMBLY SHALL BE INSTALLED HORIZONTAL AND PLUMB.
3. ALL CLEARENCES APPLY TO OUTSIDE, IN-BUILDING, AND VAULT INSTALLATIONS.
4. TO BE INSULATED AND/OR HAVE A HEAT SOURCE TO KEEP ENCLOSURE AT 40°F (NFPA 13-4-5.4.1.1).
5. ENCLOSURE SHALL INCLUDE A BORE SIGHTED DRAIN TO DAYLIGHT CAPABLE OF DRAINING A FULL RELIEF VALVE DISCHARGE. SEE DETAIL 557.
6. 4" 3/4"-0" COMPACTED GRAVEL LEVELING COURSE
7. A DOOR OR OTHER APPROVED ACCESS SHALL BE PROVIDED.
8. ALL ASSEMBLIES 2 1/2" AND LARGER SHALL BE FLANGED
9. ALL STRUCTURES TO COMPLY WITH LOCAL BUILDING CODES.
10. DETECTOR METER TO READ IN CUBIC FEET.
11. INSTALL 3/4" REDUCED PRESSURE BACKFLOW AFTER DETECTOR METER.

CITY OF TIGARD
OREGON
ENGINEERING DIVISION
PUBLIC WORKS DEPARTMENT
13125 S.W. HALL BLVD.
TIGARD, OREGON 97223
VOICE: (503) 639-4171
FAX: (503) 684-7297

APPROVED BY:
THEODORE S. KYLE, P.E.
CITY ENGINEER

JANUARY 2011
APPROVAL DATE

RP BACKFLOW ASSEMBLY
2-1/2" + (ABOVE GROUND)

NO SCALE

DWG. NO.
553

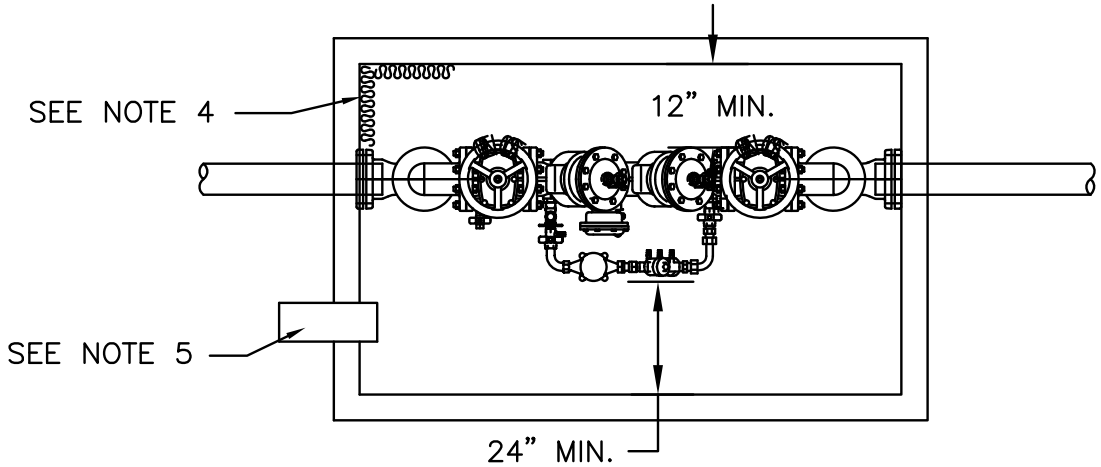

PLAN

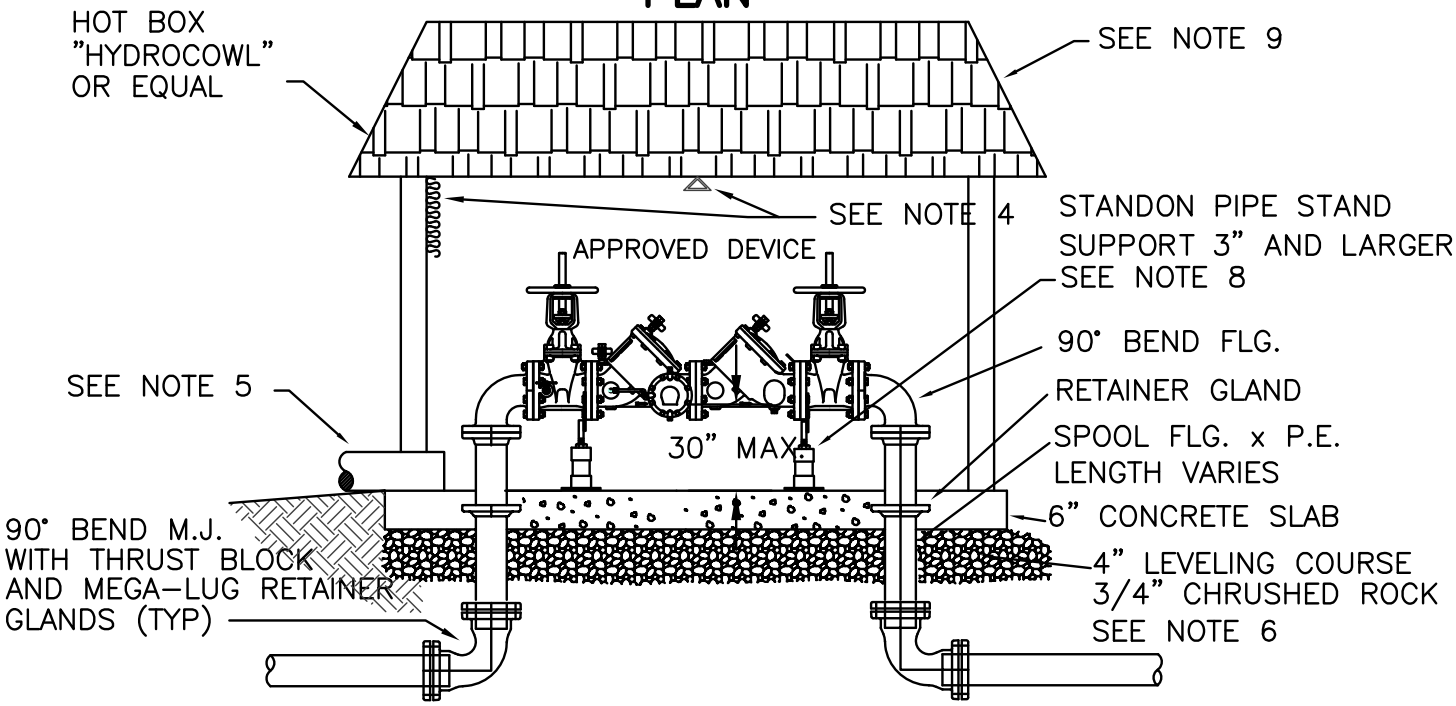

ELEVATION

NOTES:

1. REDUCED PRESSURE BACKFLOW ASSEMBLY SHALL BE INSTALLED IN A LOCATION APPROVED BY CITY OF TIGARD.
2. REDUCED PRESSURE BACKFLOW ASSEMBLY SHALL BE INSTALLED HORIZONTAL AND PLUMB.
3. ALL CLEARENCES APPLY TO OUTSIDE, IN-BUILDING, AND VAULT INSTALLATIONS.
4. TO BE INSULATED AND/OR HAVE A HEAT SOURCE TO KEEP ENCLOSURE AT 40°F (NFPA 13-4-5.4.1.1).
5. ENCLOSURE SHALL INCLUDE A BORE SIGHTED DRAIN TO DAYLIGHT CAPABLE OF DRAINING A FULL RELIEF VALVE DISCHARGE. SEE DETAIL 557.
6. 4" 3/4"-0" COMPACTED GRAVEL LEVELING COURSE
7. A DOOR OR OTHER APPROVED ACCESS SHALL BE PROVIDED.
8. ALL ASSEMBLIES 2 1/2" AND LARGER SHALL BE FLANGED
9. ALL STRUCTURES TO COMPLY WITH LOCAL BUILDING CODES.
10. DETECTOR METER TO READ IN CUBIC FEET.
11. INSTALL 3/4" REDUCED PRESSURE BACKFLOW AFTER DETECTOR METER.

CITY OF TIGARD
OREGON
ENGINEERING DIVISION
PUBLIC WORKS DEPARTMENT
13125 S.W. HALL BLVD.
TIGARD, OREGON 97223
VOICE: (503) 639-4171
FAX: (503) 684-7297

APPROVED BY:
THEODORE S. KYLE, P.E.
CITY ENGINEER

JANUARY 2011
APPROVAL DATE

REDUCED PRESSURE DETECTOR BACKFLOW (ABOVE GROUND)

NO SCALE

DWG. NO.
554

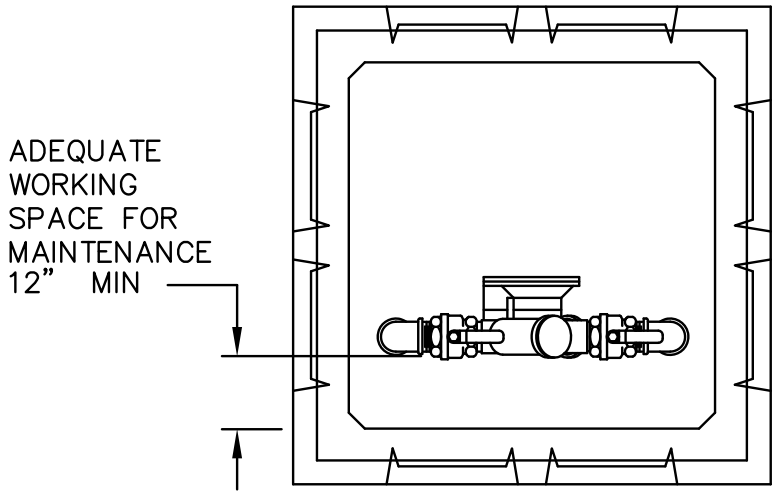

PLAN

VAULT SPECIFICATIONS

SIZE	MFG.
1"	UTILITY VAULT 3030–LA (OR EQUAL)
1–1/2" – 2"	UTILITY VAULT 3642–PUT (OR EQUAL)

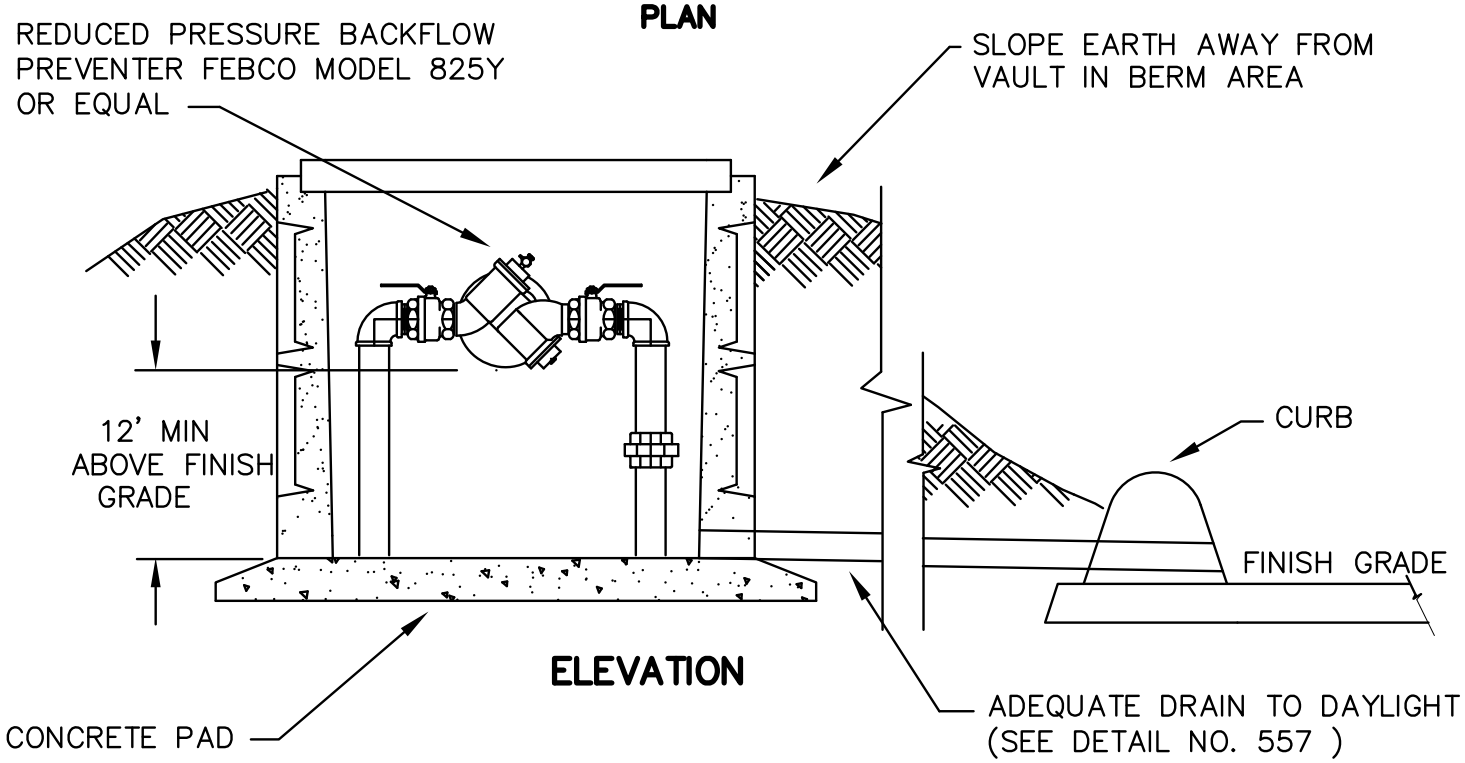

ELEVATION

INSTALLATION SHOWN IS ONLY A SUGGESTION.

NOTES:

1. DOUBLE CHECK TO BE LOCATED DIRECTLY BEHIND WATER METER.
2. BRASS, STAINLESS, OR PLASTIC PLUGS TO BE INSTALLED IN TEST COCKS IF BELOW GROUND INSTALLATION.
3. DISTANCE FROM BOTTOM OF DEVICE TO FINISH GRADE, FREEZE PROTECTION, AND CLEARENCE FOR TESTING AND REPAIR ARE THE MAJOR CONSIDERATIONS FOR INSTALLATION.

CITY OF TIGARD
OREGON
ENGINEERING DIVISION
PUBLIC WORKS DEPARTMENT
13125 S.W. HALL BLVD.
TIGARD, OREGON 97223
VOICE: (503) 639-4171
FAX: (503) 684-7297

APPROVED BY:
THEODORE S. KYLE, P.E.
CITY ENGINEER

JANUARY 2011
APPROVAL DATE

REDUCED PRESSURE BACKFLOW ASSEMBLY

NO SCALE

DWG. NO.
555

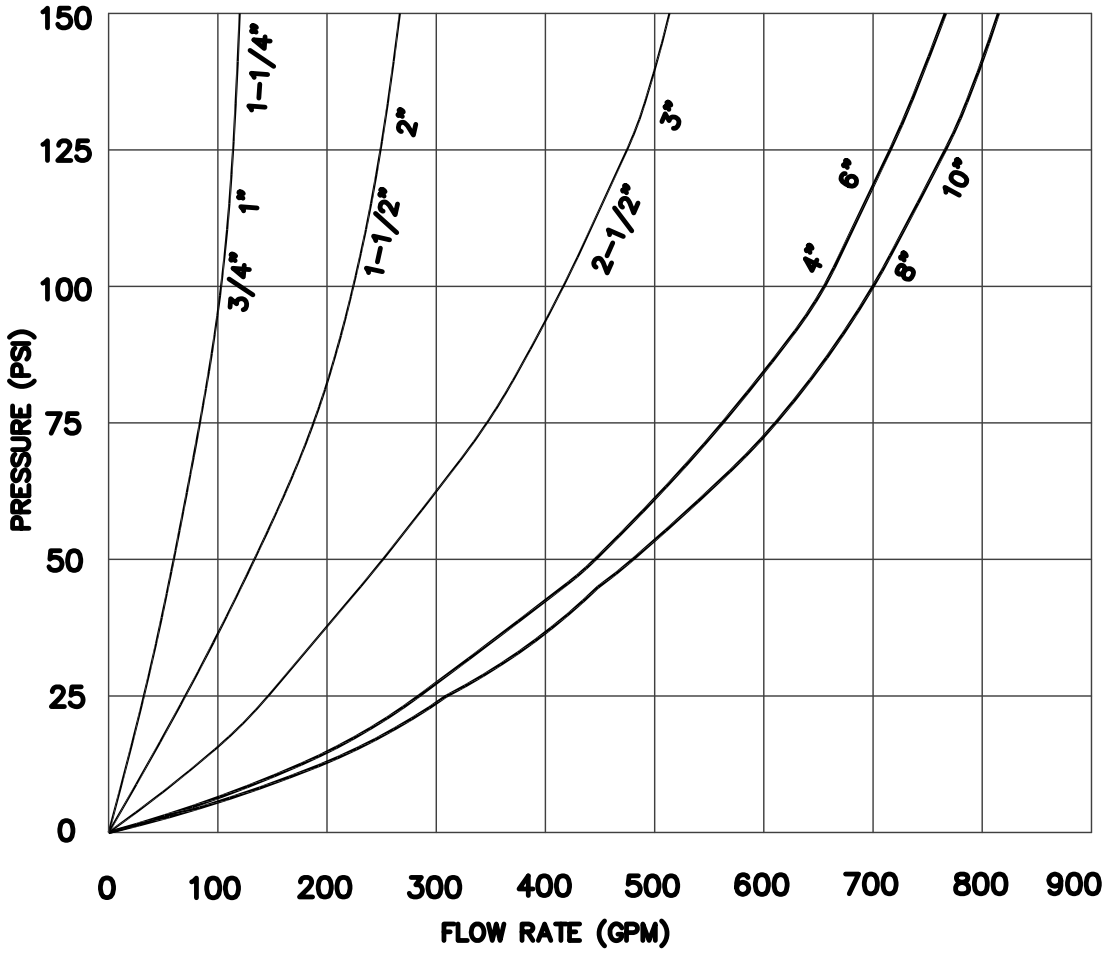

APPROXIMATE RELIEF VALVE DISCHARGE RATES
FOR REDUCED PRESSURE BACKFLOW ASSEMBLIES

CARE SHOULD BE TAKEN TO ENSURE THE ENTIRE DRAINAGE SYSTEM HAS ADEQUATE CAPACITY TO CARRY THE CONTINOUS DISCHARGE RATES SHOWN ABOVE. THE FOLLOWING ARE TYPICAL DESIGN FLOW CAPACITYIES FOR ONE MANUFACTURER'S FLOOR DRAIN. DRAIN LINE MUST BE ADEQUATELY SIZED FOR RELIEF VALVE DISCHARGE RATE.

SIZE	3"	4"	6"	8"
CAPACITY	112	170	450	760

FOR PARALLEL ASSEMBLIES, THE DRAINAGE SYSTEM SHOULD BE DESIGNED FOR THE DISCHARGE FROM BOTH ASSEMBLIES.

CITY OF TIGARD
OREGON
ENGINEERING DIVISION
PUBLIC WORKS DEPARTMENT
13125 S.W. HALL BLVD.
TIGARD, OREGON 97223
VOICE: (503) 639-4171
FAX: (503) 684-7297

APPROVED BY:
THEODORE S. KYLE, P.E.
CITY ENGINEER

JANUARY 2011
APPROVAL DATE

REDUCED PRESSURE BACKFLOW ASSEMBLY DISCHARGE RATES

NO SCALE

DWG. NO.
557

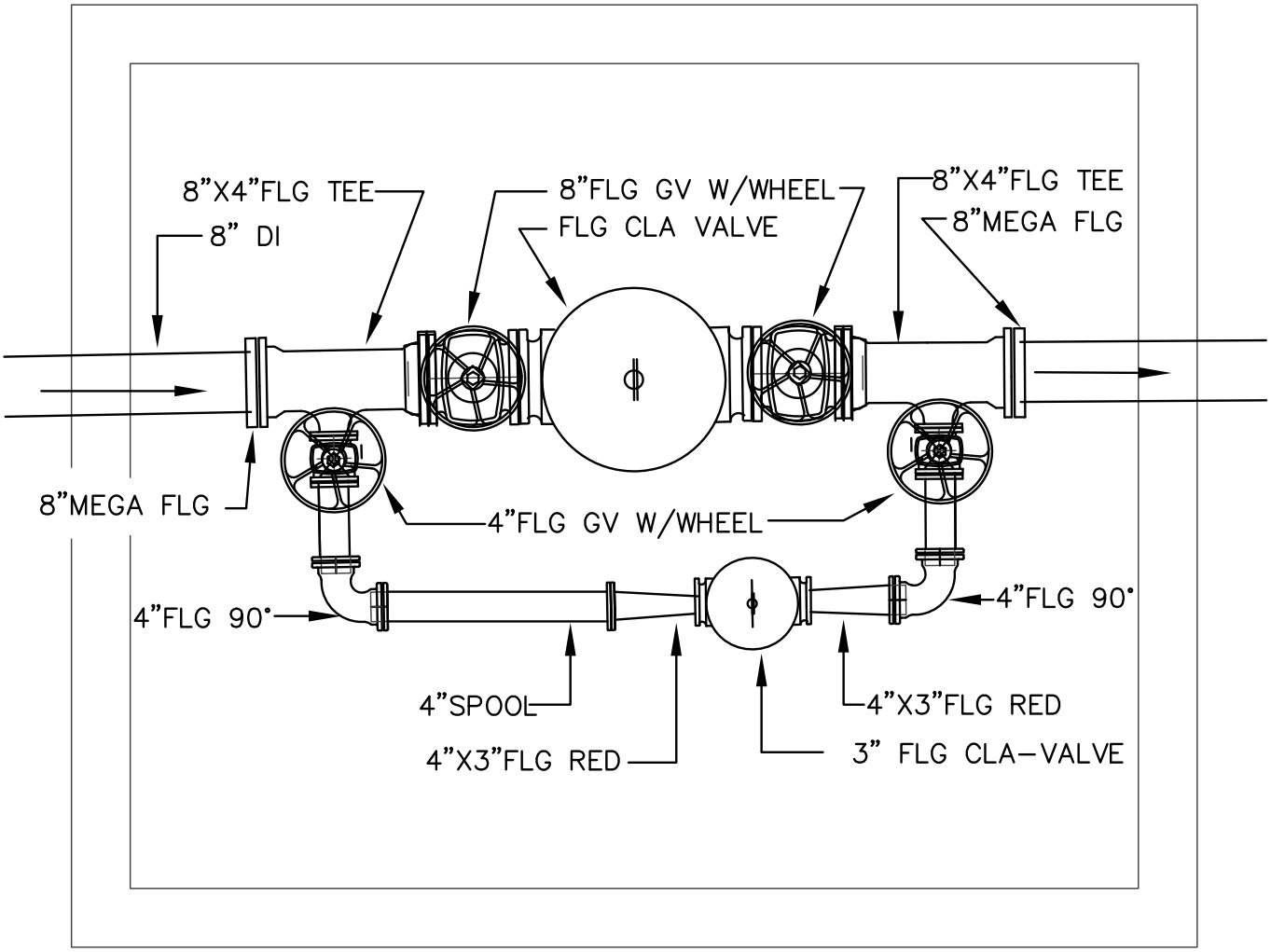

NOTE:

CLA-VAL mfg. PRE-FABRICATED DROP-IN INSTALLATIONS MAY BE SUBSTITUTED AS APPROVED EQUAL TO THESE DETAILS

CITY OF TIGARD
OREGON
ENGINEERING DIVISION
PUBLIC WORKS DEPARTMENT
13125 S.W. HALL BLVD.
TIGARD, OREGON 97223
VOICE: (503) 639-4171
FAX: (503) 684-7297

APPROVED BY:
THEODORE S. KYLE, P.E.
CITY ENGINEER

JANUARY 2011
APPROVAL DATE

PRESSURE REDUCING STATION

NO SCALE

DWG. NO.
558

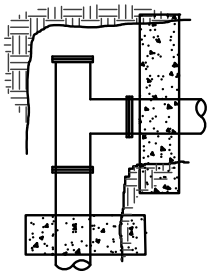

PLUGGED TEE

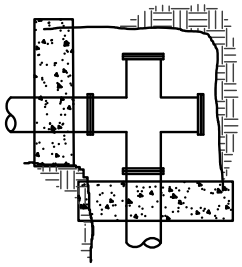

PLUGGED CROSS

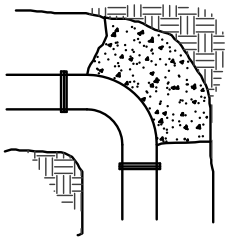

BEND

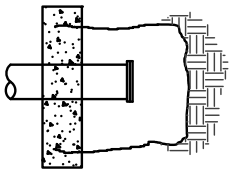

PLUG OR CAP

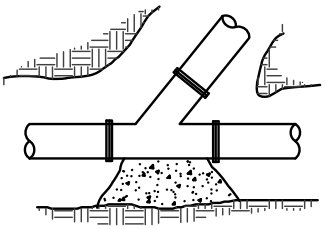

LATERAL

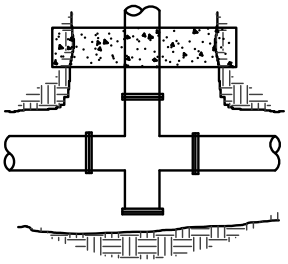

PLUGGED CROSS

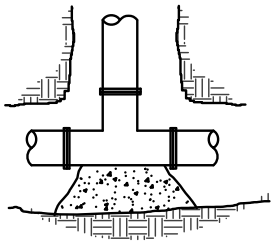

TEE

CONCRETE THRUST BLOCK SCHEDULE

(BEARING AREA OF THRUST BLOCKS IN SQUARE FEET)

FITTING SIZE (INCHES)	90°BEND, TEE, OR PLUGGED CROSS	45° BEND	22 1/2° BEND	11 1/4° BEND
4	01.9	01.3	--	--
6	04.0	02.1	01.3	--
8	07.1	03.9	02.0	01.3
12	16.0	08.8	04.5	02.3
16	28.4	15.5	08.0	04.0
24	64.0	34.9	18.1	09.1

ABOVE BEARING AREAS BASED ON TEST PRESSURE OF 150 P.S.I. AND AN ALLOWABLE SOIL BEARING STRENGTH OF 1500 POUND PER SQUARE FOOT. TO COMPUTE BEARING AREAS FOR DIFFERENT TEST PRESSURES AND SOIL BEARING STESSES, USE THE FOLLOWING EQUATION

BEARING AREAS = (TEST PRESSURE/150) X (1500/SOIL BEARING STRESS) X (TABLE VALUE)

NOTES:

1. CONCRETE THRUST BLOCKS NOT PERMITTED UNLESS APPROVED BY CITY ENGINEER
2. STRADDLE BLOCKS REQUIRED WHERE LINES MAY BE EXTENDED IN FUTURE SEE DETAIL NO. 561
3. CONCRETE THRUST BLOCKING TO BE POURED AGAINST UNDISTURBED EARTH.
4. KEEP CONCRETE CLEAR OF JOINT AND ACCESSORIES.
5. THE REQUIRED THRUST BEARING AREAS FOR SPECIAL CONNECTIONS ARE SHOWN ENCIRCLED ON THE PLANS: e.g. 15 INDICATES 15 SQUARE FEET BEARING AREA REQUIRED.
6. IF NOT SHOWN ON PLANS, REQUIRED BEARING AREAS AT FITTING SHALL BE AS INDICATED ABOVE, ADJUST IF NECESSARY, TO CONFORM TO THE TEST PRESSURE(S) AND ALLOWABLE SOIL BEARING STRESS(ES) STATED IN THE SPECIAL PROVISIONS.
7. BEARING AREAS AND SPECIAL BLOCKING DETAILS SHOWN ON PLANS TAKE PRESIDENCE OVER BEARING AREAS AND BLOCKING DETAILS SHOWN ON THIS STANDARD DETAIL. BEARING AREA OF THRUST BLOCKS ARE IN SQUARE FEET.

CITY OF TIGARD
OREGON
ENGINEERING DIVISION
PUBLIC WORKS DEPARTMENT
13125 S.W. HALL BLVD.
TIGARD, OREGON 97223
VOICE: (503) 639-4171
FAX: (503) 684-7297

APPROVED BY:
THEODORE S. KYLE, P.E.
CITY ENGINEER

JANUARY 2011
APPROVAL DATE

STANDARD THRUST BLOCK

NO SCALE

DWG. NO.
560

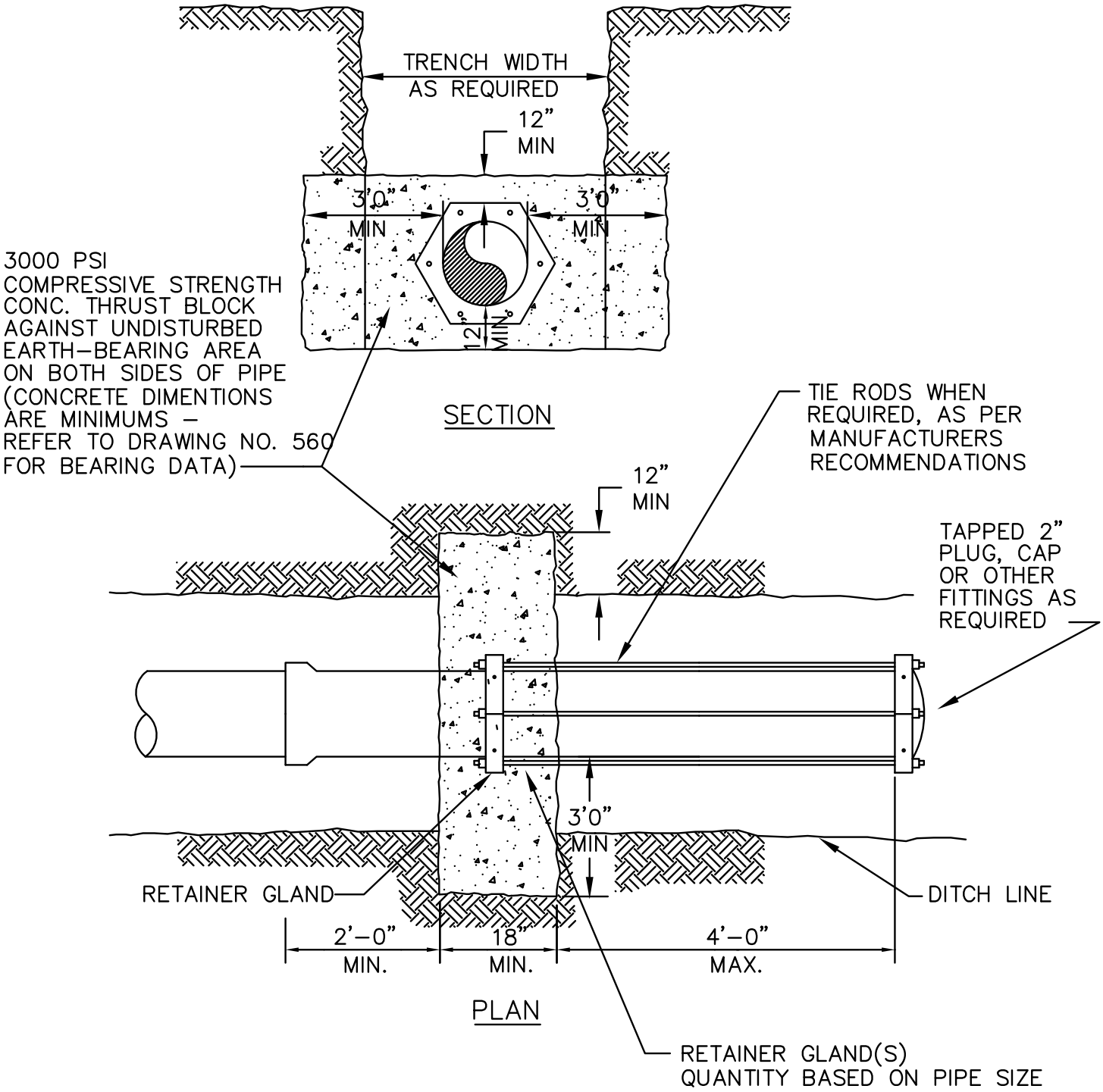

STRADDLE BLOCKS TO BE USED ONLY BY APPROVAL OF CITY ENGINEER.

1. END OF LINE BLOW OFFS
2. BLIND TEES
3. BLIND CROSSES
4. VERTICAL BENDS

NOTE: MECHANICAL FIELD RESTRAINT IS REQUIRED FOR THRUST RESTRAINT

CITY OF TIGARD OREGON ENGINEERING DIVISION PUBLIC WORKS DEPARTMENT 13125 S.W. HALL BLVD. TIGARD, OREGON 97223 VOICE: (503) 639-4171 FAX: (503) 684-7297	APPROVED BY: THEODORE S. KYLE, P.E. CITY ENGINEER JANUARY 2011 APPROVAL DATE	**STRADDLE BLOCK**	NO SCALE DWG. NO. **561**

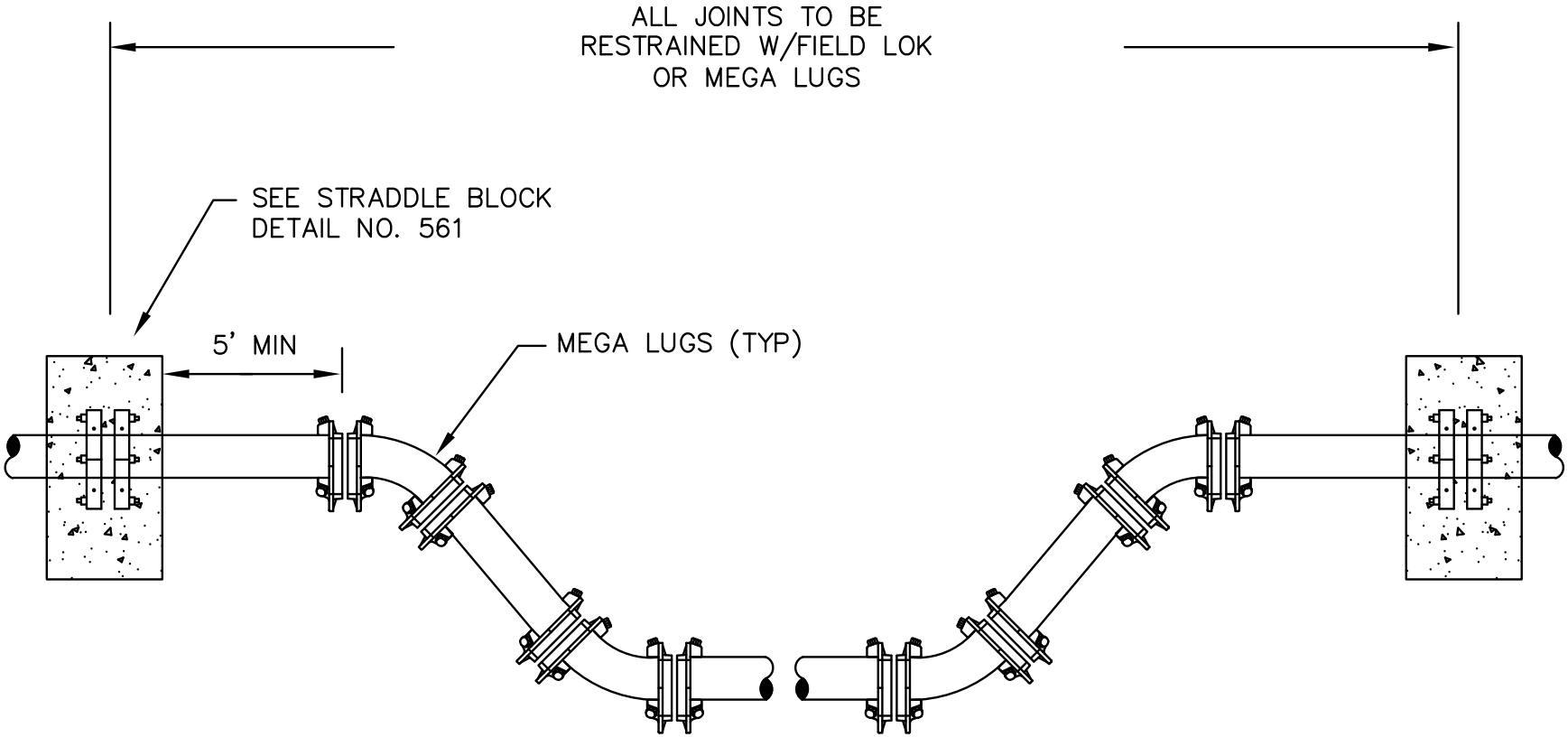

NOTE:

BEARING AREA IN SQUARE FEET TO BE DETERMINED BY CHART ON DETAIL NO. 560 OR BY CITY ENGINEER, DEPENDING ON SOIL CONDITIONS.

CITY OF TIGARD
OREGON
ENGINEERING DIVISION
PUBLIC WORKS DEPARTMENT
13125 S.W. HALL BLVD.
TIGARD, OREGON 97223
VOICE: (503) 639-4171
FAX: (503) 684-7297

APPROVED BY:
THEODORE S. KYLE, P.E.
CITY ENGINEER

JANUARY 2011
APPROVAL DATE

VERTICAL BEND RESTRAINT

NO SCALE

DWG. NO.
563

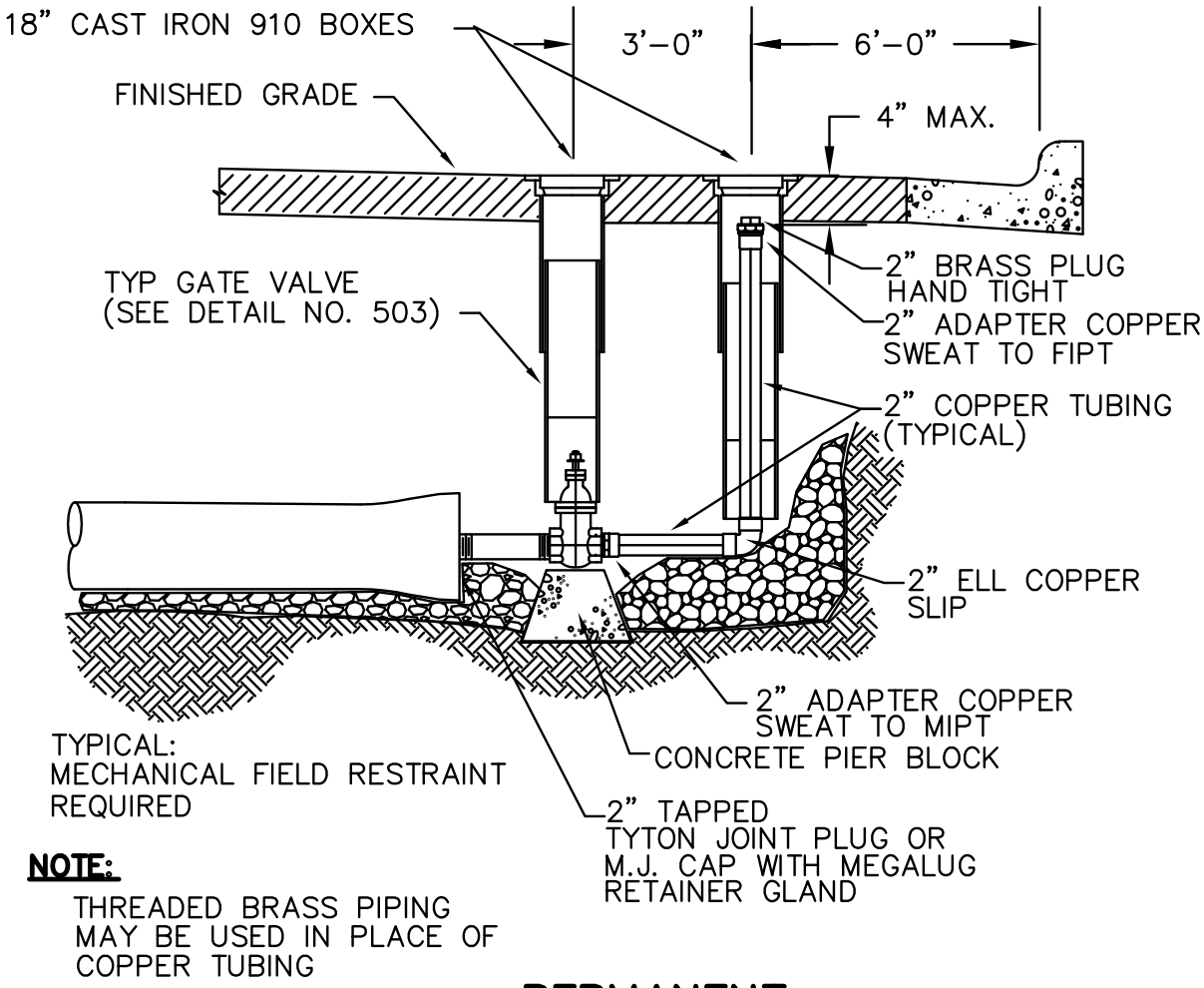

NOTE:

THREADED BRASS PIPING MAY BE USED IN PLACE OF COPPER TUBING

PERMANENT

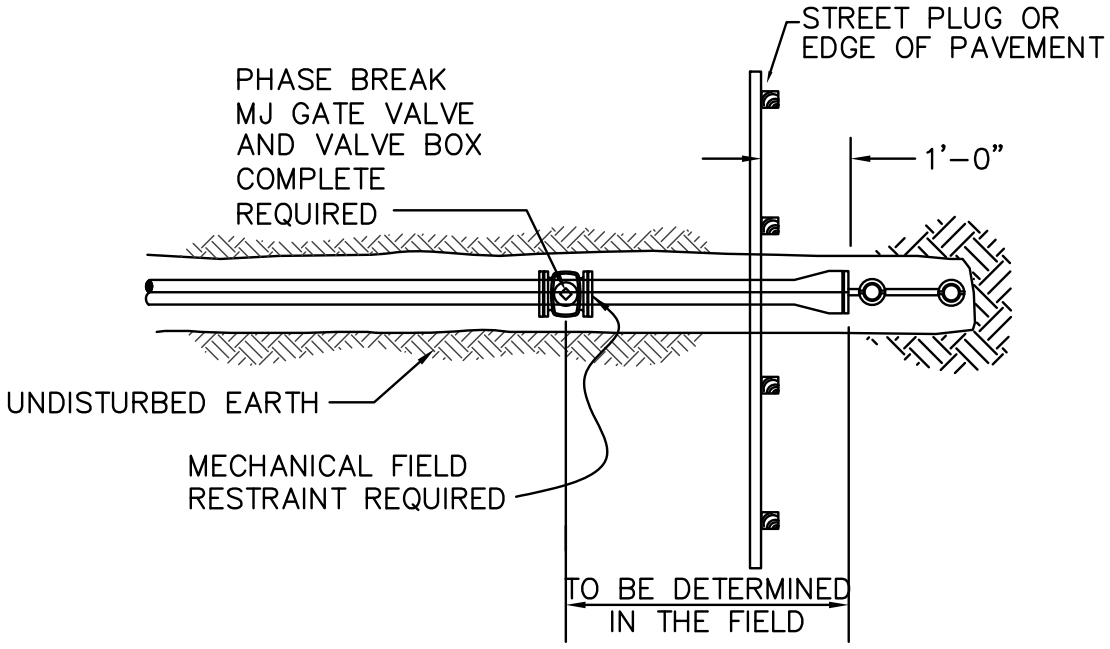

TEMPORARY

CITY OF TIGARD
OREGON
ENGINEERING DIVISION
PUBLIC WORKS DEPARTMENT
13125 S.W. HALL BLVD.
TIGARD, OREGON 97223
VOICE: (503) 639-4171
FAX: (503) 684-7297

APPROVED BY:
THEODORE S. KYLE, P.E.
CITY ENGINEER

JANUARY 2011
APPROVAL DATE

2" STANDARD BLOWOFF

NO SCALE

DWG. NO.
570

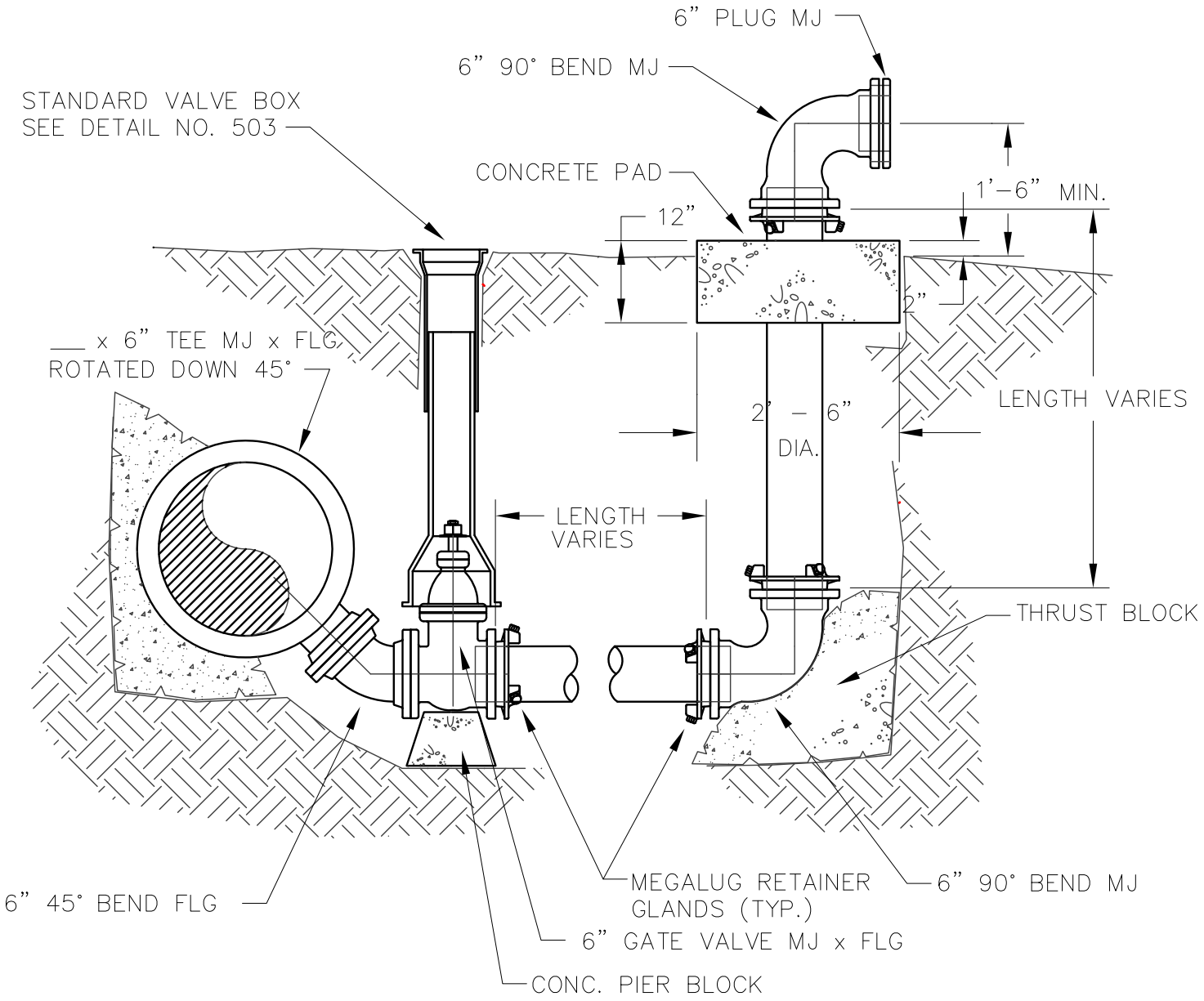

CITY OF TIGARD OREGON ENGINEERING DIVISION PUBLIC WORKS DEPARTMENT 13125 S.W. HALL BLVD. TIGARD, OREGON 97223 VOICE: (503) 639-4171 FAX: (503) 684-7297	APPROVED BY: THEODORE S. KYLE, P.E. CITY ENGINEER JANUARY 2011 APPROVAL DATE	6" BLOWOFF	NO SCALE DWG. NO. 571

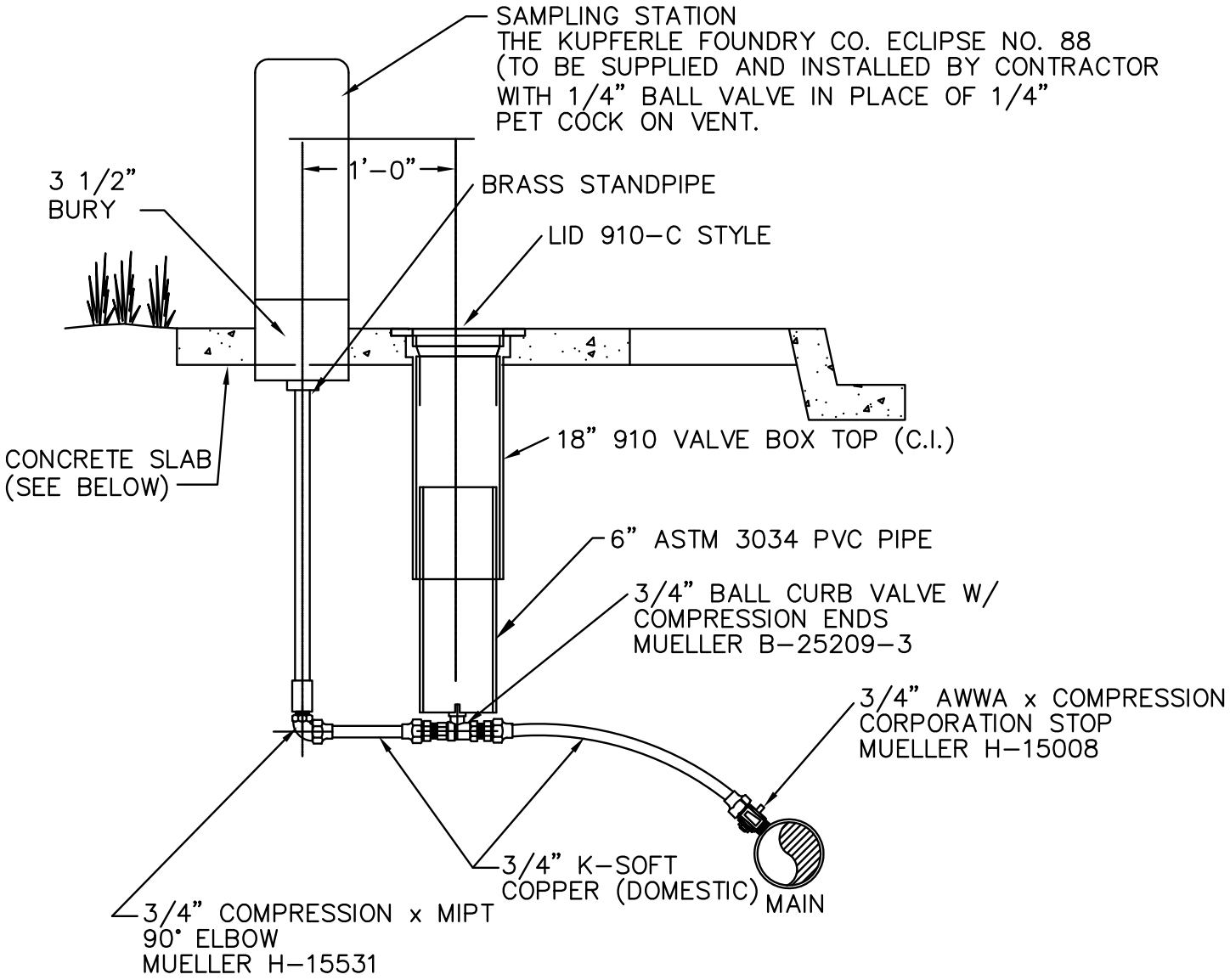

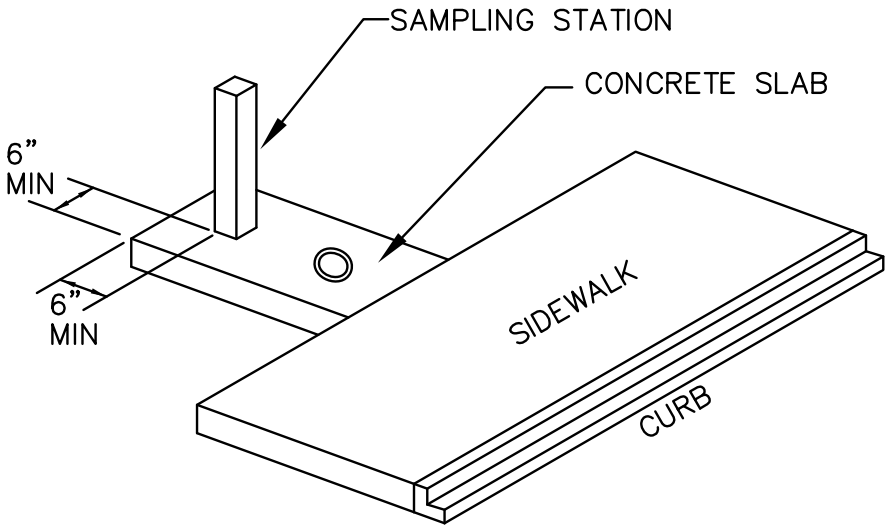

CITY OF TIGARD OREGON ENGINEERING DIVISION PUBLIC WORKS DEPARTMENT 13125 S.W. HALL BLVD. TIGARD, OREGON 97223 VOICE: (503) 639-4171 FAX: (503) 684-7297	APPROVED BY: THEODORE S. KYLE, P.E. CITY ENGINEER JANUARY 2011 APPROVAL DATE	**SAMPLING STATION**	NO SCALE DWG. NO. 572

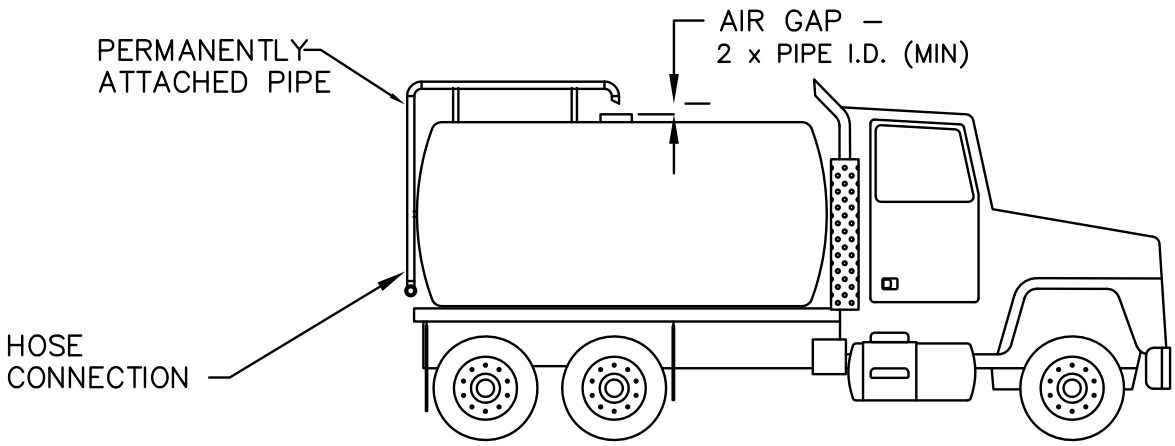

WITH AIR GAP

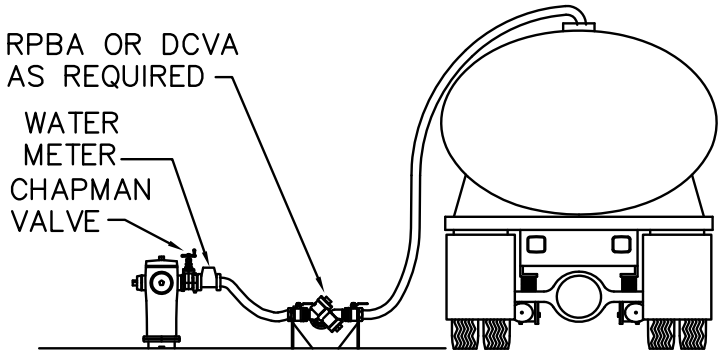

WITH PORTABLE ASSEMBLY

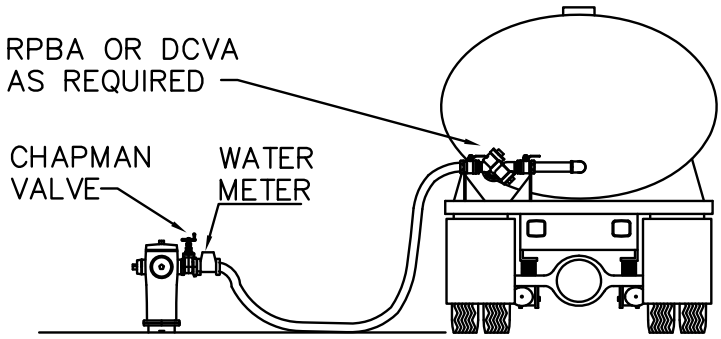

WITH TRUCK MOUNTED ASSEMBLY

CITY OF TIGARD
OREGON
ENGINEERING DIVISION
PUBLIC WORKS DEPARTMENT
13125 S.W. HALL BLVD.
TIGARD, OREGON 97223
VOICE: (503) 639-4171
FAX: (503) 684-7297

APPROVED BY:
THEODORE S. KYLE, P.E.
CITY ENGINEER

JANUARY 2011
APPROVAL DATE

MINIMUM PROTECTION FOR FILLING TANKER TRUCK

NO SCALE

DWG. NO.
573

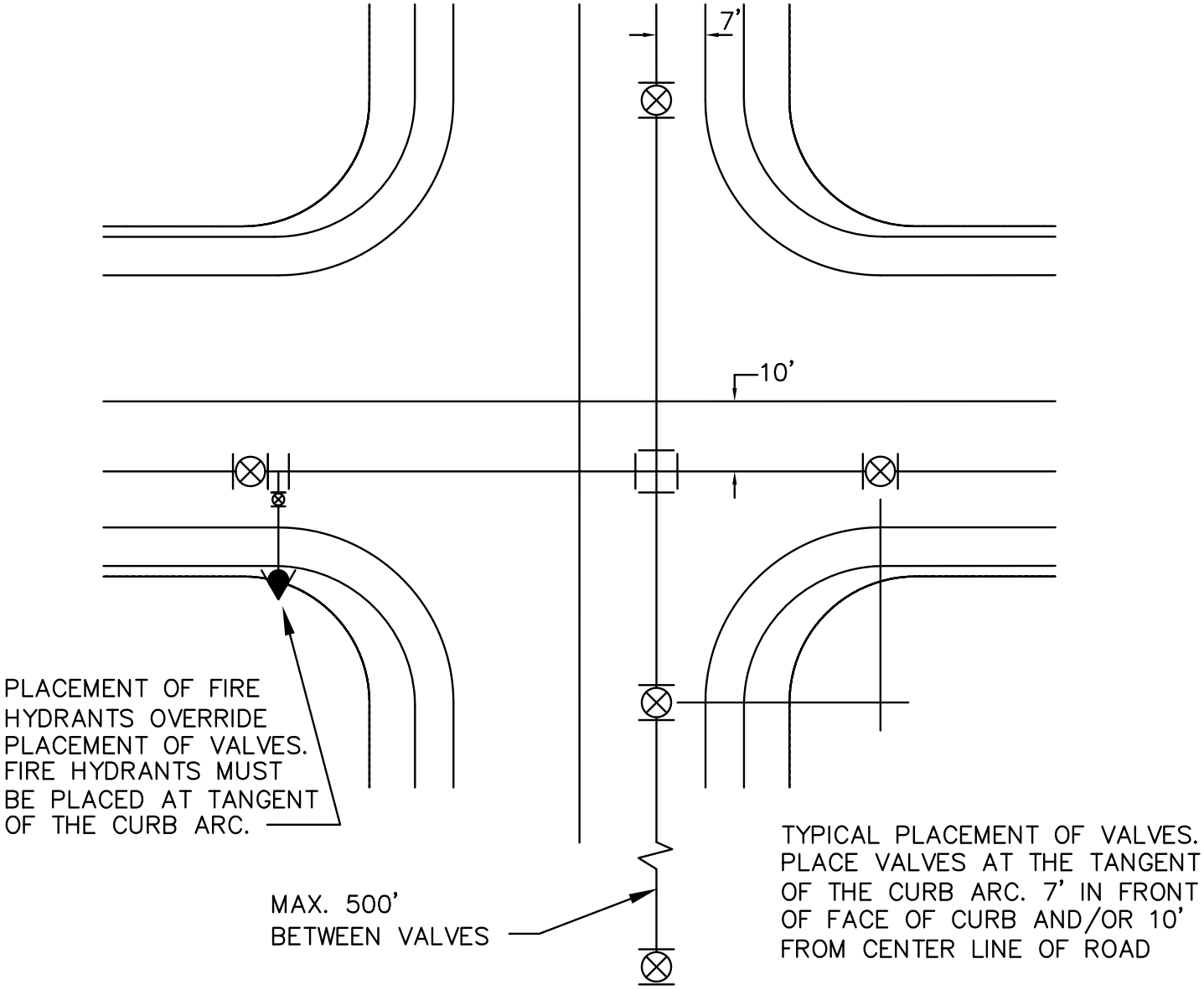

NOTES:

1. VALVES ARE NOT TO BE LOCATED IN CURB AND GUTTER AREA
2. VALVE BOXES ARE REQUIRED AT EACH VALVE LOCATION
3. VALVE BOXES CONSIST OF 6" ASTM 3034 PVC RISER AND 18" CAST IRON 910 COVER
4. MAXIMUM SPACING FOR VALVES IS 500 FEET
5. ALL VALVES ARE TO CONFORM WITH AWWA STANDARDS
6. GATE VALVES ARE REQUIRED FOR 8" AND SMALLER PIPE.
7. BUTTERFLY VALVES ARE REQUIRED FOR 12" AND LARGER PIPE.

CITY OF TIGARD OREGON ENGINEERING DIVISION PUBLIC WORKS DEPARTMENT 13125 S.W. HALL BLVD. TIGARD, OREGON 97223 VOICE: (503) 639-4171 FAX: (503) 684-7297	APPROVED BY: THEODORE S. KYLE, P.E. CITY ENGINEER JANUARY 2011 APPROVAL DATE	TYPICAL VALVE AND HYDRANT LOCATION	NO SCALE DWG. NO. 575

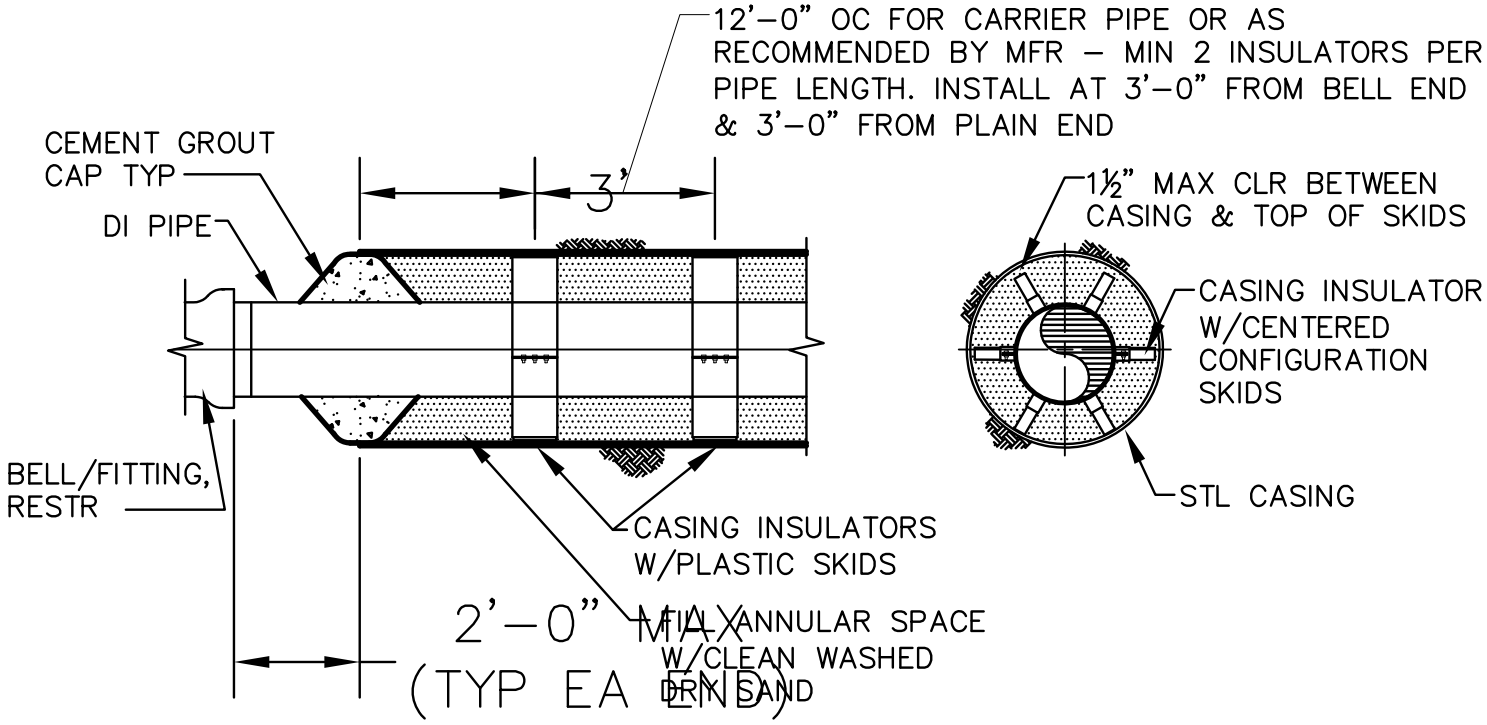

END DETAIL **SECTION A–A**

CARRIER PIPE DIA	TYPICAL CASING DIA REQUIRED
6"	16"
8"	24"
12"	24"
16"	36"
18"	36"
20"	36"
24"	48"

NOTES:

1. REQUIRED CASING MATERIAL AND WALL THICKNESS DEPENDENT UPON INSTALLATION METHOD, DEPTH OF BURY, SOIL CONDITIONS, AND OTHER FACTORS. CASING DIAMETER MAY NEED TO BE INCREASED TO ACCOMMODATE GREATER WALL THICKNESS OF CARRIER PIPE OR CASING.
2. PROVIDE 2" MINIMUM CLEARANCE BETWEEN CASING AND CARRIER PIPE BELLS AND APPURTENANCES.
3. VERIFY CASING SIZES PRIOR TO ORDERING AND SIZING CASING INSULATORS.
4. ALL CARRIER PIPE TO BE RESTRAINED.
5. PASSIVE ANODES MAY BE REQUIRED AS DETERMINED BY CITY ENGINEER.

CITY OF TIGARD
OREGON
ENGINEERING DIVISION
PUBLIC WORKS DEPARTMENT
13125 S.W. HALL BLVD.
TIGARD, OREGON 97223
VOICE: (503) 639-4171
FAX: (503) 684-7297

APPROVED BY:
THEODORE S. KYLE, P.E.
CITY ENGINEER

JANUARY 2011
APPROVAL DATE

CASING DETAIL

NO SCALE

DWG. NO.
580

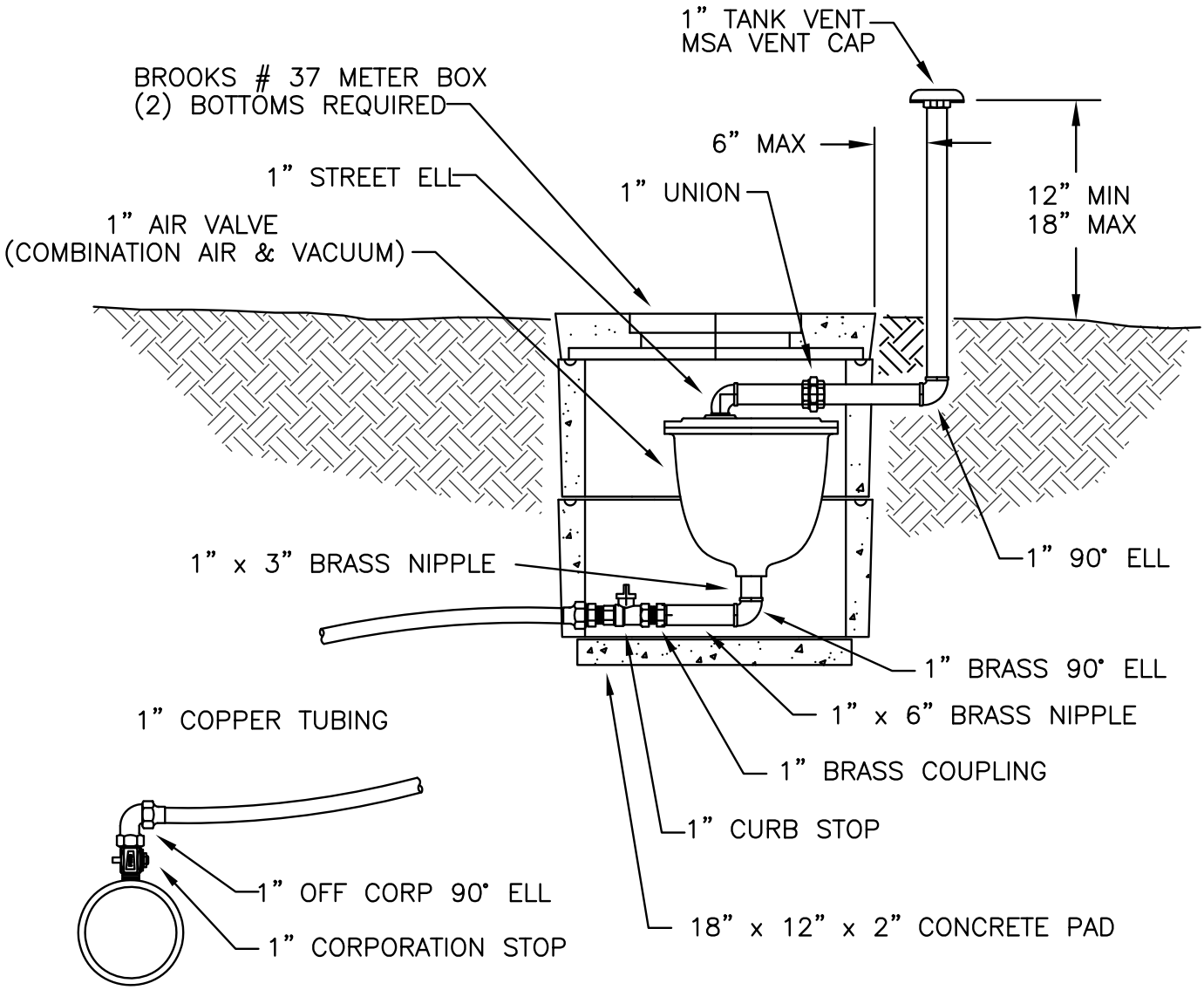

NOTES:

1. FOR 12" AND SMALLER WATER MAINS
2. VENT PIPING TO BE GALV.
3. SLOPE COPPER TUBING FROM MAIN UP TO AIR VALVE 1% MIN.
4. LOCATE AS NEEDED OR REQUIRED
5. CONTACT CITY WATER DEPARTMENT FOR ACCEPTABLE DEVICES.
6. PROVIDED & INSTALLED BY CONTRACTOR.

CITY OF TIGARD OREGON ENGINEERING DIVISION PUBLIC WORKS DEPARTMENT 13125 S.W. HALL BLVD. TIGARD, OREGON 97223 VOICE: (503) 639-4171 FAX: (503) 684-7297	APPROVED BY: THEODORE S. KYLE, P.E. CITY ENGINEER JANUARY 2011 APPROVAL DATE	1" COMBINATION AIR & VACUUM VALVE	NO SCALE DWG. NO. 590

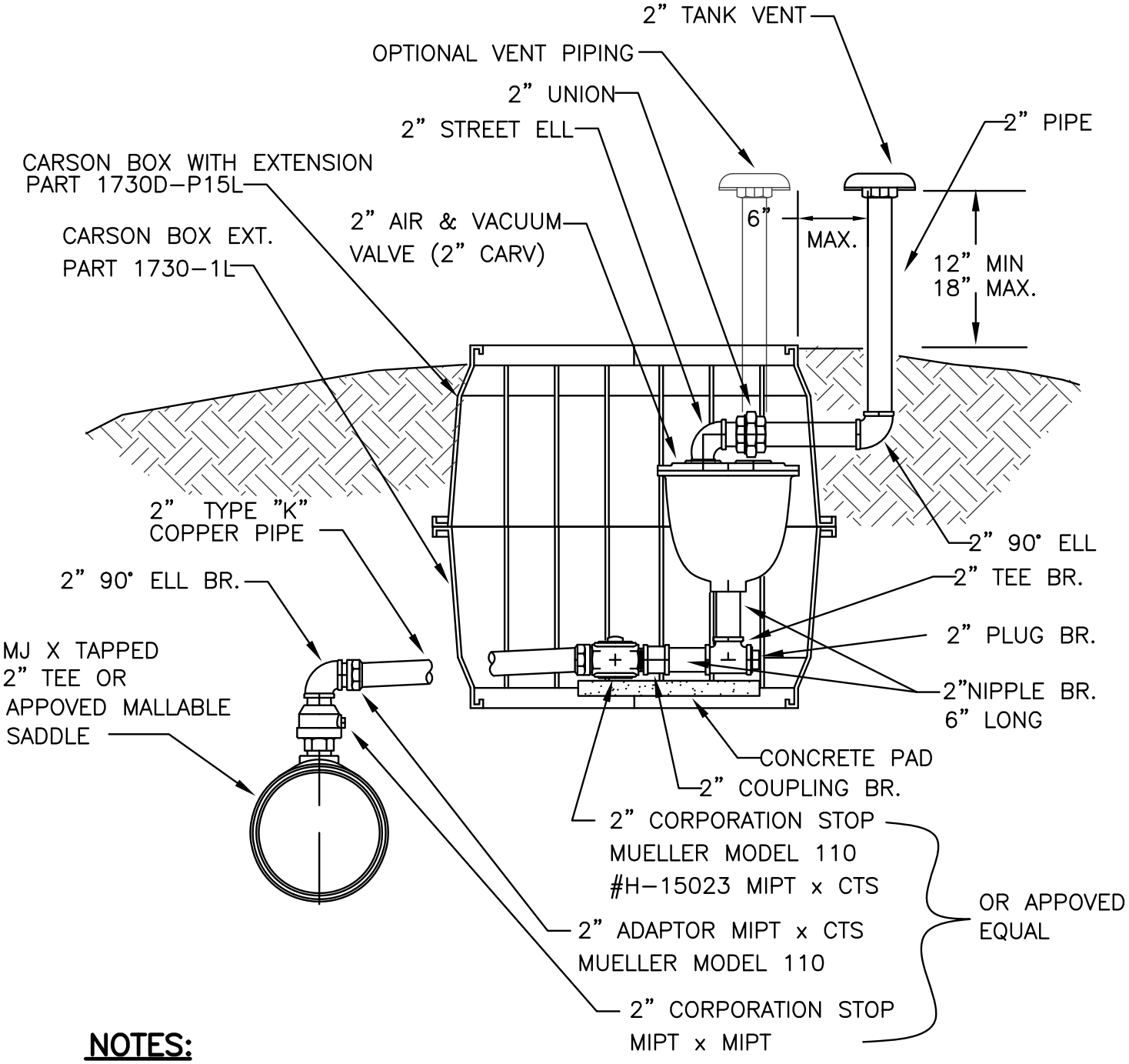

NOTES:

1. VENT PIPING TO BE GALV.
2. SLOPE COPPER TUBE FROM MAIN UP TO AIR VALVE 1% MIN.
3. CONTACT WATER DEPARTMENT FOR ACCEPPTABLE DEVICES.
4. PROVIDED & INSTALLED BY CONTRACTOR.

CITY OF TIGARD OREGON ENGINEERING DIVISION PUBLIC WORKS DEPARTMENT 13125 S.W. HALL BLVD. TIGARD, OREGON 97223 VOICE: (503) 639-4171 FAX: (503) 684-7297	APPROVED BY: THEODORE S. KYLE, P.E. CITY ENGINEER JULY 2009 APPROVAL DATE	**2" COMBINATION AIR & VACUUM VALVE**	NO SCALE DWG. NO. 591