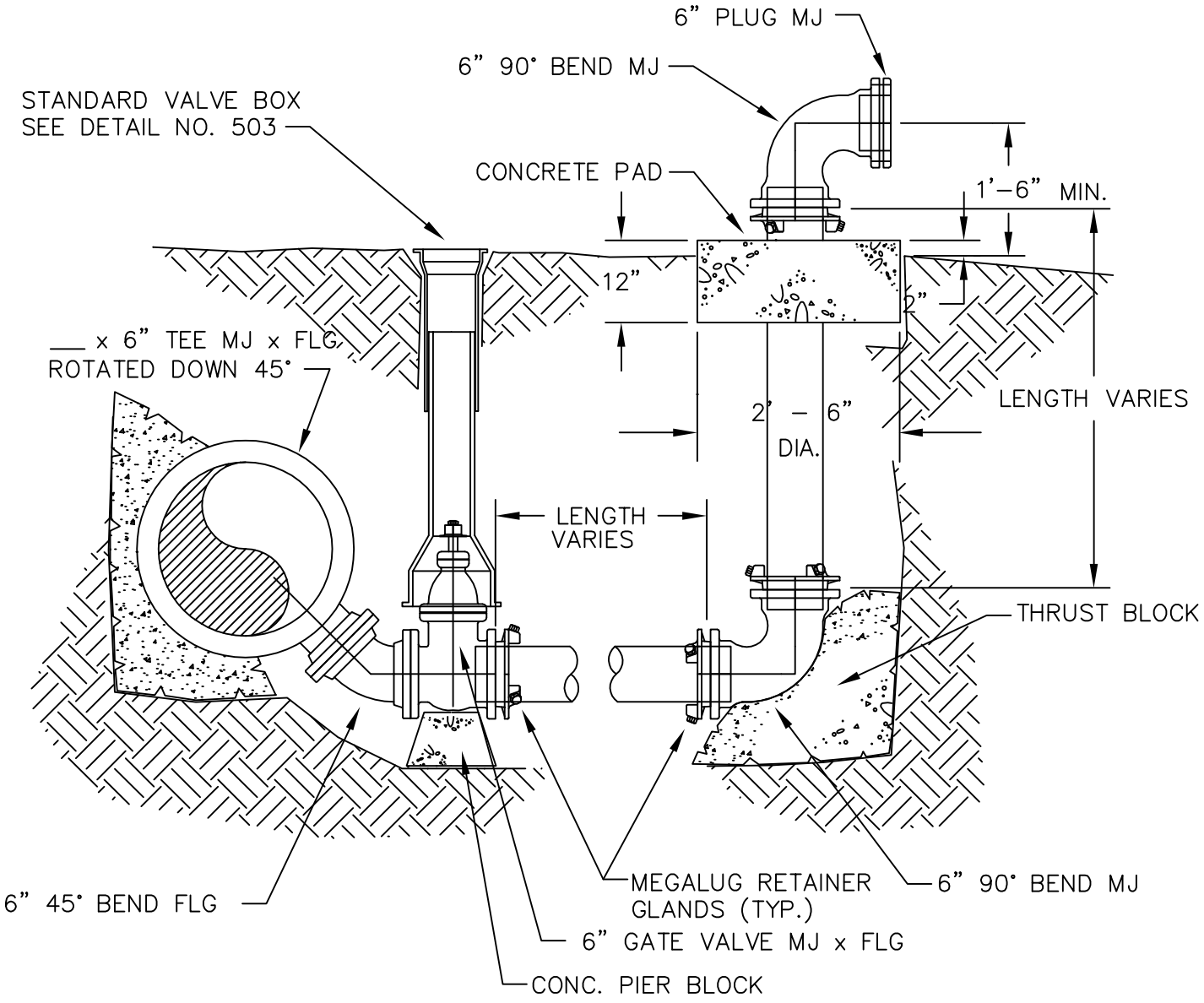

CITY OF TIGARD OREGON ENGINEERING DEPARTMENT 13125 S.W. HALL BLVD. TIGARD, OREGON 97223 VOICE: (503) 639-4171 FAX: (503) 684-7297	APPROVED BY: AGUSTIN P. DUENAS CITY ENGINEER MARCH 1998 APPROVAL DATE	6" BLOWOFF	NO SCALE DWG. NO. 571