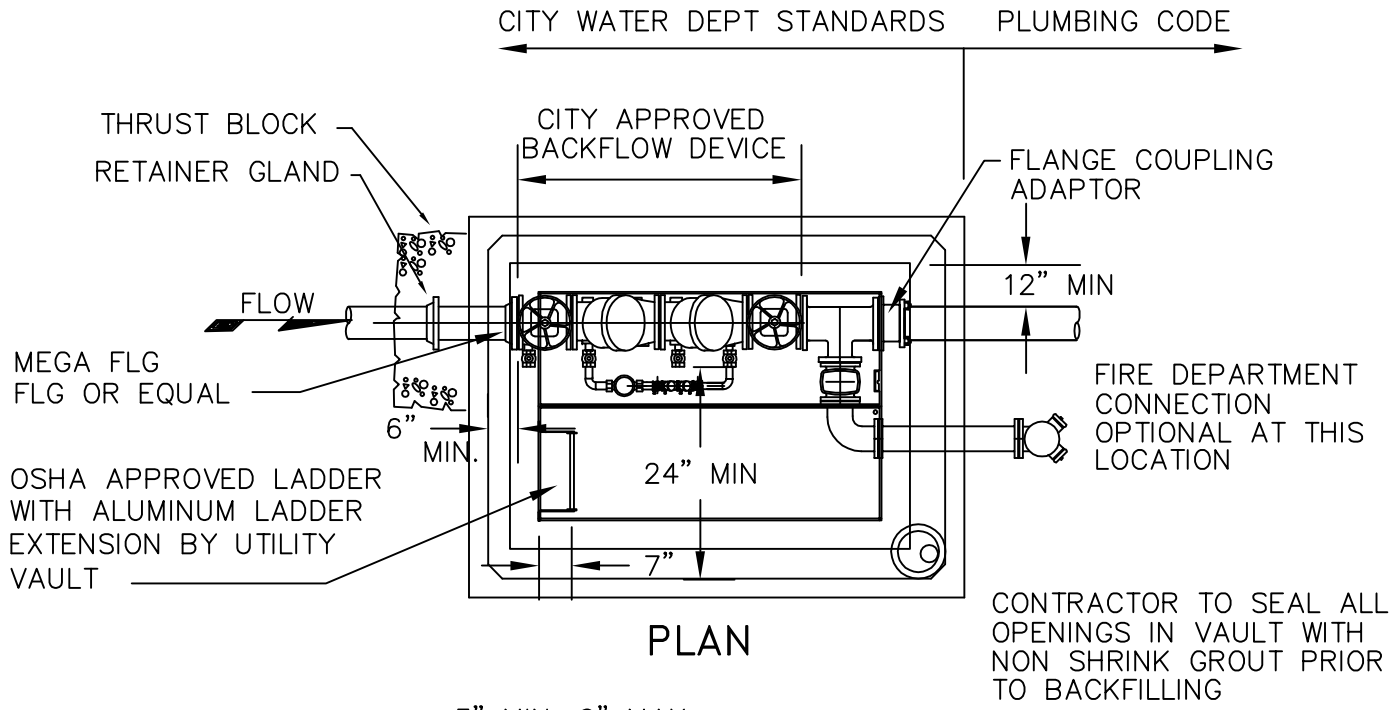

PLAN

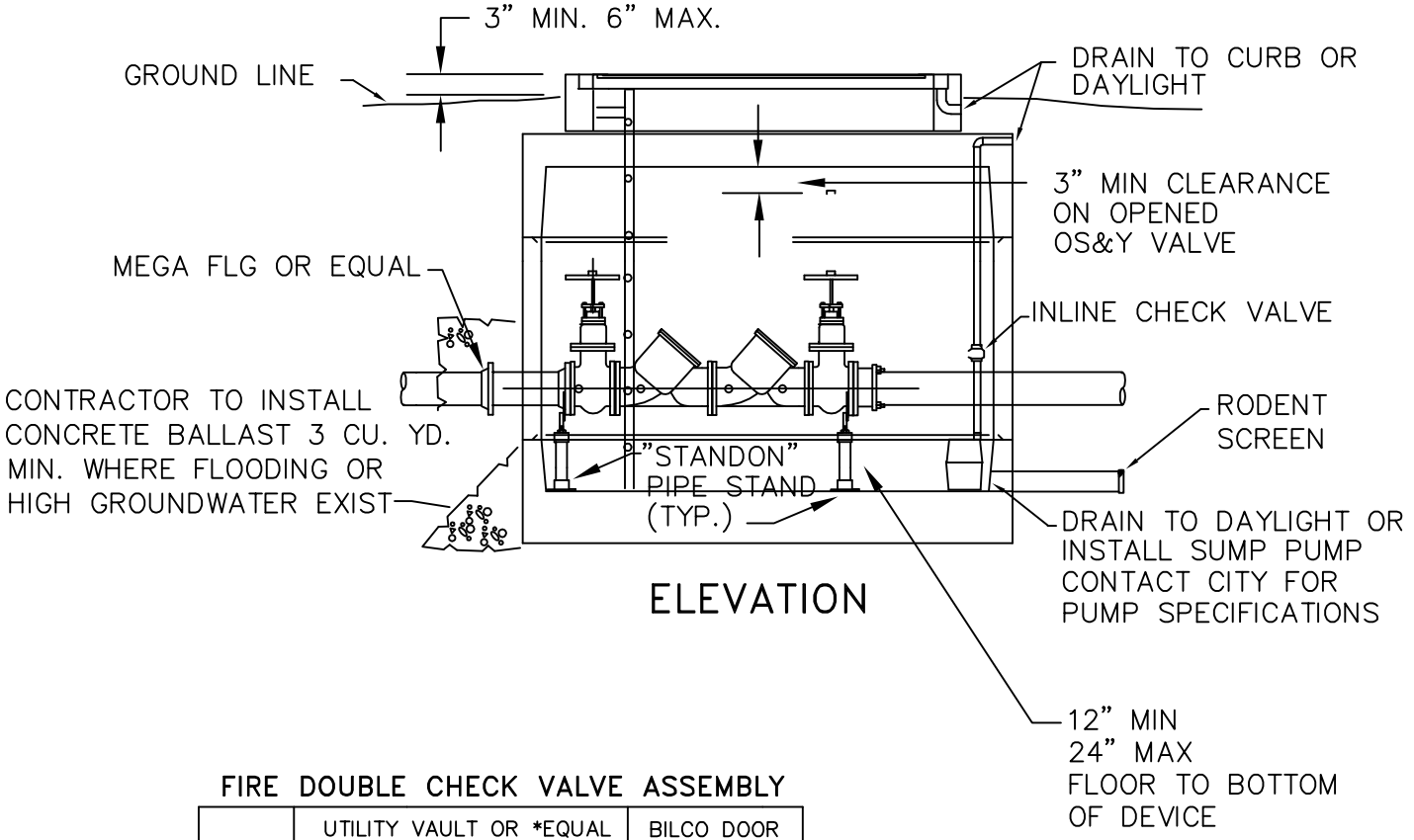

ELEVATION

FIRE DOUBLE CHECK VALVE ASSEMBLY

SIZE	UTILITY VAULT OR *EQUAL		BILCO DOOR OR *EQUAL
	WITH F.D.C.	WITHOUT F.D.C.	
4	676–WA	577–WA	J–5AL
6	687–WA	676–WA	J–5AL
8	5106–LA	687–WA	JD–3AL
10	5106–LA	2106–LA	JD–3AL

* CITY ENGINEER APPROVED EQUAL

CITY OF TIGARD
OREGON

ENGINEERING DEPARTMENT
13125 S.W. HALL BLVD.
TIGARD, OREGON 97223
VOICE: (503) 639–4171
FAX: (503) 684–7297

APPROVED BY:
AGUSTIN P. DUENAS
CITY ENGINEER

MARCH 1998
APPROVAL DATE

DOUBLE CHECK DETECTOR VALVE ASSEMBLY

NO SCALE

DWG. NO.
533