ABBREVIATIONS

AFF	ABOVE FINISHED FLOOR	LTG	LIGHTING
A	AMPERE (AMP)	LV	LOW VOLTAGE
ALT	ALTERNATE	MATV	MASTER ANTENNA TELEVISION
ARCH	ARCHITECT / ARCHITECTURAL	MCA	MINIMUM CIRCUIT AMPS
ATS	AUTOMATIC TRANSFER SWITCH	MCB	MAIN CIRCUIT BREAKER
CB	CIRCUIT BREAKER	MCC	MOTOR CONTROL CENTER
C	CONDUIT	MDP	MAIN DISTRIBUTION PANEL
CCTV	CLOSED CIRCUIT TELEVISION	MECH	MECHANICAL
CKT	CIRCUIT	MLO	MAIN LUGS ONLY
CLG	CEILING	MTS	MANUAL TRANSFER SWITCH
CT	CURRENT TRANSFORMER	NIC	NOT IN CONTRACT
DN	DOWN	NL	NIGHT LIGHT CIRCUIT
EMERG	EMERGENCY	PA	PUBLIC ADDRESS
EMT	ELECTRIC METALLIC TUBING	PE	PHOTO ELECTRIC CELL
EP	EXPLOSION PROOF	PF	POWER FACTOR
EPO	EMERGENCY POWER OFF	PNL	PANELBOARD
EWC	ELECTRIC WATER COOLER	PRGS	PVC RIGID GALVANIZED STEEL
FA	FIRE ALARM	PVC	POLYVINYL CHLORIDE CONDUIT
FLA	FULL LOAD AMPS	PWR	POWER
FLUOR	FLUORESCENT	SDP	SUB-DISTRIBUTION PANEL
GFI	GROUND FAULT INTERRUPTER	STR	STARTER
GFCI	GROUND FAULT CIRCUIT INTERRUPTER	SV	SOLENOID VALVE
GRC	GALVANIZED RIGID CONDUIT	SW	SWITCH
GRD	GROUND	TP	TAMPERPROOF
HP	HORSEPOWER	TTB	TELEPHONE TERMINAL BOARD
HPS	HIGH PRESSURE SODIUM	TTC	TELEPHONE TERMINAL CABINET
HV	HIGH VOLTAGE	TVSS	TRANSIENT VOLTAGE SURGE SUPPRESSION
HZ	HERTZ	TYP	TYPICAL
IG	ISOLATED GROUND	UG	UNDERGROUND
KW	KILOWATT	UON	UNLESS OTHERWISE NOTED
KWH	KILOWATT HOUR	UPS	UNINTERRUPTABLE POWER SUPPLY
KV	KILOVOLT	V	VOLTAGE
KVA	KILOVOLT AMP	VA	VOLT AMPERES
KVAR	KILOVOLT AMPS REACTIVE	VP	VAPOR PROOF
LA	LIGHTNING ARRESTOR	W	WATTS
		WP	WEATHER PROOF
		XFMR	TRANSFORMER
		XFSW	TRANSFER SWITCH

LIGHTING

- CEILING LUMINAIRE: SURFACE, RECESSED
- CEILING LUMINAIRE: PENDANT MOUNTED
- WALL LUMINAIRE: SURFACE, RECESSED
- WALL WASHER: SURFACE, RECESSED
- TRACK WITH HEADS LOCATED
- FLUORESCENT LUMINAIRE: SURFACE, RECESSED
- FLUORESCENT LUMINAIRE: WALL MOUNTED
- FLUORESCENT LUMINAIRE: INDUSTRIAL
- POLE MOUNTED LIGHT
- DESIGNATES LIGHT ON EMERGENCY CIRCUIT
- EXIT LIGHT: CEILING, WALL (ARROWS AS SHOWN)
- BOLLARD
- EMERGENCY BATTERY LIGHT: HEADS AS SHOWN
- $ $2 — WALL SWITCH: 1 POLE, 2 POLE
- $3 $4 — WALL SWITCH: 3 WAY, 4 WAY
- $LV $P — WALL SWITCH: LOW VOLTAGE, PILOT
- $K $M — WALL SWITCH: KEY LOCK, MOMENTARY
- $OL — SWITCH: MANUAL MOTOR SWITCH WITH THERMAL OVERLOAD
- OCCUPANCY SENSOR: INFRARED, ULTRASONIC.
- A — DESIGNATES LUMINAIRE TYPE (SEE LUMINAIRE SCHEDULE)

SYMBOLS

- XXXX 123 — EQUIPMENT DESIGNATOR SEE SCHEDULE.
- E — EXISTING TO REMAIN
- X — EXISTING TO BE REMOVED
- R — EXISTING TO BE RELOCATED
- N — NEW
- 1 — SHEET NOTE

POWER

- WALL RECEPTACLE: SINGLE, DUPLEX, EMERGENCY, 4-PLEX
- E, O — WALL RECEPTACLE: EMERGENCY, 4-PLEX, 4-Plex Orange
- CEILING RECEPTACLE: DUPLEX
- DENOTES RECEPTACLE ABOVE COUNTER
- SPECIAL PURPOSE OUTLET AS NOTED, EMERGENCY
- C — CLOCK HANGER RECEPTACLE
- FLUSH IN-FLOOR OUTLET: DUPLEX, COMBINATION, SIGNAL
- PEDESTAL OUTLET: POWER, SIGNAL, COMBINATION
- SURFACE OUTLET STRIP: DIMENSION AS SHOWN
- TELEPOWER POLE, POWER, COMBINATION
- J — JUNCTION BOX
- F — DISCONNECT SWITCH: FUSED, NON-FUSED
- MOTOR STARTER: MAGNETIC, COMBINATION
- MOTOR CONNECTION
- R, S — CONTACTOR, RELAY, SOLENOID
- PUSH BUTTON STATION
- WIRING CONCEALED IN CEILING OR WALL
- WIRING CONCEALED IN FLOOR OR UNDERGROUND
- HOME RUN DESTINATION SHOWN
- CONDUIT ELL: UP, DN.

NOTE

THIS IS A STANDARD LEGEND SHEET, SOME SYMBOLS MAY APPEAR ON THIS SHEET THAT DO NOT APPEAR ON THE DRAWINGS.

EQUIPMENT

- ELECTRICAL EQUIPMENT
- PANELBOARD: SURFACE, RECESSED
- CABINET: SURFACE, RECESSED
- T — TRANSFORMER
- EQUIPMENT WITH GROUND
- CURRENT TRANSFORMER
- CABLE TRAY
- GROUND ROD
- V, A — VOLT METER, AMP METER
- EMERGENCY GENERATOR

SIGNAL

- WALL OUTLET: TELEPHONE, DATA WITH 1 CAT6 CABLE
- E — WALL OUTLET: EMERGENCY TELEPHONE
- WALL OUTLET: COMBINATION TELEPHONE/DATA WITH 2 CAT6 CABLES
- 4 — WALL OUTLET: COMBINATION TELEPHONE/DATA WITH 4 CAT6 CABLES
- DENOTES WALL OUTLET ABOVE COUNTER
- SYSTEM CLOCK: WALL, CEILING
- EMERGENCY BLUE FLASHING LIGHTS
- SP — SPEAKER: WALL, CEILING
- V — VOLUME CONTROL: WALL, CEILING
- TV — WALL OUTLET: COAX CABLE (CATV)
- TC — TIME CLOCK

ONE LINE

- CIRCUIT BREAKER
- SWITCH, FUSED SWITCH
- BUSS
- AUTOMATIC SWITCH
- M — METER
- XXXX XXXX — PANEL
- XXXX — FEEDER CALLOUT

FIRE ALARM

- FSD — FIRE SMOKE DAMPER
- FS TS — SPRINKLER SYSTEM SWITCH: FLOW, TAMPER
- P — MANUAL FIRE ALARM STATION
- X — SMOKE DETECTOR
  - P=PHOTOELECTRIC
  - I=IONIZATION
  - AB=PHOTOELECTRIC WITH AUDIBLE BASE
  - R=RELAY BASE, 2 AMP SPDT
- X — PHOTOELECTRIC DUCT DETECTOR
  - P=PHOTOELECTRIC
  - I=IONIZATION
  - PR=PHOTOELECTRIC WITH RELAY, 2 AMP SPDT
  - IR=IONIZATION WITH RELAY, 2 AMP SPDT
- X — THERMAL DETECTOR
  - RC=135°F RATE COMPENSATED
  - ROR=135°F FIXED/RATE OF RISE
  - ROR2=190°F FIXED/RATE OF RISE
  - F135=135°F FIXED
  - F190=190°F FIXED
- RM — RELAY/CONTROL MODULE
- M — MONITOR MODULE, SINGLE INPUT
- DM — MONITOR MODULE, DUAL INPUT
- SM — SYNCH MODULE
- DSM — DUAL SYNCH MODULE
- # — AUDIBLE/VISUAL, # INDICATES CANDELA
- AUDIBLE, BELL
- # — VISUAL, # INDICATES CANDELA
- FACP — FIRE ALARM CONTROL PANEL
- FAA — FIRE ALARM SIGNAL ANNUCIATOR
- SS — SURGE SUPPRESSER
- NAC — NAC POWER SUPPLY
- DACT — DIGITAL ALARM COMMUNICATOR
- ASD ASDC — AIR SAMPLING DETECTOR, AIR SAMPLING DETECTOR CONTROL
- AIR SAMPLING DETECTION PORT

SECURITY

- SACP — SECURITY ALARM CONTROL PANEL
- SAA — SECURITY ALARM ANNUNCIATOR
- CR — CARD READER: WALL MOUNTED/MULLION MOUNTED
- PP — PIN PAD
- K — KEY PAD
- CP — CARD READER/PIN PAD CONBINATION
- L — ELECTRIC/MAGNETIC LOCK CONNECTION
- H — HIDDEN PUSH BUTTON
- D — DOOR MAGNETIC CONTACT
- CCTV CAMERA: FIXED, PAN/TILT/ZOOM
- A — AUDIO DETECTOR/LISTENING DEVICE
- MOTION DETECTOR: WALL, CEILING MOUNTED

LUMINAIRE SCHEDULE

TYPE A FLUORESCENT SURFACE MOUNT WRAPAROUND
1. SIZE: 12" BY 3-3/4" DEEP BY 48" LONG NOMINAL.
2. LAMP: FLUORESCENT, TWO 32-WATT T8.
3. BALLAST: 120VAC, ELECTRONIC, ONE 2-LAMP <10% THD.
4. MOUNTING: SURFACE
5. FINISH: WHITE
6. LENS: 0.125" THICK #12 PATTERN ACRYLIC
7. MANUFACTURER: LITHONIA AW SERIES, COLUMBIA, DAY-BRITE, LIGHTOLIER CBS 323, METALUX OR APPROVED.

TYPE A1 SAME AS TYPE A EXCEPT :
1. PROVIDE ONE LAMP ON EMERGENCY BATTERY BACK UP BALLAST TO PRODUCE FULL LUMEN OUTPUT DURING 90 MINUTE EMERGENCY MODE.
2. MANUFACTURER: BODINE B30 SERIES, IOTA, LITHONIA, SURE-LITE OR APPROVED.

TYPE C FLUORESCENT RECESSED DOWNLIGHT IC RATED
1. SIZE: 5" DIAMETER NOMINAL APETURE
2. LAMP: 26 WATT TRIPLE TUBE
3. BALLAST: 120VAC, ELECTRONIC.
4. MOUNTING: RECESSED, CEILING.
5. REFLECTOR: SATIN CONE
6. SPECIAL: UL LISTED FOR INSTALLATION IN DRYWALL CEILING.
7. MANUFACTURER: LIGHTOLIER LYTECASTER 1004F26ESR, LITHONIA, DAY-BRITE OR APPROVED.

TYPE C1 SAME AS TYPE C EXCEPT:
1. PROVIDE BATTERY BACKUP BALLAST TO PRODUCE FULL LUMEN OUTPUT DURING 90 MINUTE EMERGENCY MODE
2. MANUFACTURER: BODINE B30 SERIES, IOTA, LITHONIA, SURE-LITE OR APPROVED.

TYPE C2 SAME AS C2 EXCEPT PROVIDE UL RATED FOR WET LOCATIONS.

TYPE D LINE VOLTAGE TRACK
1. SIZE: 5" APETURE DIAMETER BY 8" LENGTH PAR30 ROUNDBACK LAMPHOLDER
2. LAMP: INCANDESCENT, 75 WATT PAR30
3. VOLTAGE: 120VAC
4. TRACK: SINGLE CIRCUIT TRACK IN LENGTHS AS SHOWN ON DRAWINGS.
5. MOUNTING: SURFACE, CEILING.
6. FINISH: WHITE, WHITE BAFFLE TRIM
7. MANUFACTURER: LITHONIA LTC SERIES, LIGHTOLIER OR APPROVED.

TYPE D1 SAME AS TYPE D EXCEPT:
1. SIZE: 4-7/8" DIAMETER BY 4-3/4" LONG PAR SHADE LAMPHOLDER, HEAD STYLE PRSD
2. ACCESSORIES: PROVIDE LTWFH500 FILTER HOLDER AND L500 EGGCRATE LOUVER.

TYPE F FLUORESCENT WALL BRACKET
1. SIZE: 24-1/2" WIDE BY 3-1/16" HIGH BY 4-7/8" DEEP NOMINAL.
2. LAMP: FLUORESCENT, TWO 18 WATT TWIN TUBE 4 PIN.
3. BALLAST: 120VAC, MAGNETIC
4. MOUNTING: SURFACE, WALL.
5. FINISH: MATTE WHITE
6. LENS: ACRYLIC DIFFUSER.
7. MANUFACTURER: LIGHTOLIER HELIO 5412WH

TYPE H FLUORESCENT CEILING PENDANT INDIRECT
1. SIZE: 30" DIAMETER BY 30" OAH NOMINAL.
2. LAMP: FLUORESCENT, (3) 39 WATT TWIN 2611
3. BALLAST: 120VAC, INTEGRAL ELECTRONIC, H.P.F.
4. MOUNTING: STEM, CEILING.
5. TRIM AND CANOPY FINISH: COORDINATE WITH ARCHITECT
6. STEM AND ACCENT FINISH: COORDINATE WITH ARCHITECT
7. MANUFACTURER: VISA LIGHTING HARMONY CP3880.

TYPE J FLUORESCENT SUSPENDED INDIRECT LUMINAIRE
1. SIZE: 10" WIDE BY 3" DEEP BY 4'-0" LONG NOMINAL
2. LAMP: FLUORESCENT, TWO 32 WATT T8 PER SECTION
3. BALLAST: 120VAC, ELECTRONIC, <10% THD.
4. MOUNTING: SUSPENDED FROM CEILING, 10'-0" AFF.
5. FINISH: WHITE
6. MANUFACTURER: FINELITE SERIES 8-PW

TYPE J1 SAME AS TYPE J EXCEPT:
3. PROVIDE BATTERY BACKUP BALLAST TO PRODUCE FULL LUMEN OUTPUT DURING 90 MINUTE EMERGENCY MODE
4. MANUFACTURER: BODINE B30 SERIES, IOTA, LITHONIA, SURE-LITE OR APPROVED.

TYPE S FLUORESCENT WALL MOUNTED SCONCE
1. SIZE: 14" WIDE BY 14" HIGH BY 7-5/8" DEEP NOMINAL
2. LAMP: FLUORESCENT 9 WATT TWIN TUBE, G23 BASE
3. BALLAST: 120VAC, ELECTRONIC.
4. MOUNTING: SURFACE, WALL.
5. FINISH: COORDINATE WITH ARCHITECT
6. MANUFACTURER: VISA LIGHTING SOLACE CB3630.

TYPE SA EXTERIOR FLUORESCNT WALL MOUNT
1. SIZE: 7.25" HIGH BY 18" LONG BY 9" DEEP NOMINAL.
2. LAMP: FLUORESCENT, 2/42 TRT
3. BALLAST: 120VAC, ELECTRONIC H.P.F. <10% THD WITH ZERO DEGREE START.
4. MOUNTING: SURFACE, WALL.
5. LENS: SEGMENTED REFLECTORS, MDU (MEDIUM THROW, 10% UPLIGHT)
6. FINISH: COORDINATE WITH ARCHITECT
7. MANUFACTURER: LITHONIA WSR SERIES.
8. UL RATED FOR WET LOCATIONS.

TYPE SB HIGH PRESSURE SODIUM EXTERIOR SHOE BOX POLE FIXTURE
1. SIZE:
2. LAMP: HPS, ONE 100 WATT
3. BALLAST: 120VAC, MAGNETIC
4. MOUNTING: 30' (25' MOUNTING HEIGHT) WITH 8' ARM
5. FINISH: BRONZE
6. LENS: FIBERGLASS.
7. MANUFACTURER: AMERICAN ELECTRIC

TYPE SB1 SAME AS SB EXCEPT PROVIDE 6' ARM

LUMINAIRE SCHEDULE GENERAL NOTES

1. THIS LUMINAIRE SCHEDULE IS NOT COMPLETE WITHOUT A COPY OF THE PROJECT MANUAL CONTAINING THE ELECTRICAL SPECIFICATIONS.
2. VERIFY LUMINAIRE VOLTAGE WITH BRANCH CIRCUIT SUPPLYING POWER TO LUMINAIRE PRIOR TO ORDERING.
3. T8 FLUORESCENT LAMPS TO BE 3000K WITH A MINIMUM CRI OF 85.
4. COMPACT FLUORESCENT LAMPS TO BE 3500K WITH A MINIMUM CRI OF 82.
5. METAL HALIDE LAMPS TO BE 3900K WITH A MINIMUM CRI OF 70.
6. T5 LAMPS TO BE 3500K WITH A MINIMUM CRI OF 82.
7. VERIFY AND COORDINATE ALL CEILING TYPES WITH LUMINAIRE LOCATIONS.
8. PROVIDE 12" ADJUSTABILITY IN AIRCRAFT CABLE LENGTH, IF USED, AS DETERMINED BY CONTRACTOR.
9. ALL COMPACT FLUORESCENT LAMPS TO COMPLY WITH FEDERAL TOXIC CHARACTERISTIC LEACHING PROCEDURE (TCLP), WHERE AVAILABLE.
10. ALL STANDARD LENGTH FLUORESCENT LAMPS TO COMPLY WITH FEDERAL TOXIC CHARACTERISTIC LEACHING PROCEDURE (TCLP), WHERE AVAILABLE.

GENERAL NOTES:

A ELECTRICAL EQUIPMENT ARRANGEMENT IN ELECTRICAL ROOM IS BASED ON ONE MANUFACTURER. COORDINATE SPACE REQUIREMENTS WITH EQUIPMENT SUPPLIER. MAINTAIN CLEARANCE REQUIREMENTS, AS PER NEC AND PER EQUIPMENT MANUFACTURER'S RECOMMENDATIONS.

B COORDINATE ALL ELECTRICAL DEVICE LOCATIONS (SWITCHES, RECEPTACLES, ETC.) WITH ARCHITECTURAL AND CASEWORK DRAWINGS TO PREVENT MOUNTING DEVICES IN MIRRORS, BACK SPLASHES, BEHIND CABINETS, ETC.

C COORDINATE CONNECTION REQUIREMENTS FOR MECHANICAL EQUIPMENT WITH DIVISION 15 PRIOR TO ROUGH-IN. THIS INCLUDES, BUT IS NOT LIMITED TO, OVERCURRENT PROTECTION, CONDUCTORS, RACEWAYS, AND OTHER CIRCUITING EQUIPMENT REQUIRED FOR COMPLETE INSTALLATION. MODIFY ELECTRICAL AS REQUIRED TO ACCOMODATE, CONNECT, AND COMPLETE ALL MECHANICAL EQUIPMENT.

D PROVIDE EQUIPMENT GROUNDING CONDUCTOR (GREEN WIRE) IN ALL RACEWAYS.

E0.1 ELECTRICAL LEGEND AND ABBREVIATIONS

SCALE: SCALE: NONE

REGISTERED PROFESSIONAL ENGINEER 18602PE OREGON JULY 10, 1986 FLAVIANO V. REYES JR. EXPIRES 12/31/08

LRS architects inc.
720 NW Davis
Suite 300
Portland, OR 97209
Tel. 503.221.1121
Fax. 503.221.2077

REYES ENGINEERING
RAMIR K. KATAYA
ELECTRICAL DESIGNER
PASSION
CREATIVITY
SUSTAINABILITY
1733 SE Morrison Street
Portland, OR 97214
Tel: (503) 771-1986
Fax: (503) 772-2496
CONSULTANTS

TIGARD SENIOR CENTER RENOVATION AND ADDITION
8815 SW O'MARA ST.
TIGARD, OREGON 97223
ELECTRICAL LEGEND AND ABBREVIATIONS

PROJECT NAME

DATE: 09.17.07
CHECK: FVH
DRAWN BY: RBJ
PROJECT: 207037

E0.1

Copyright © 2005 LRS Architects, Inc.

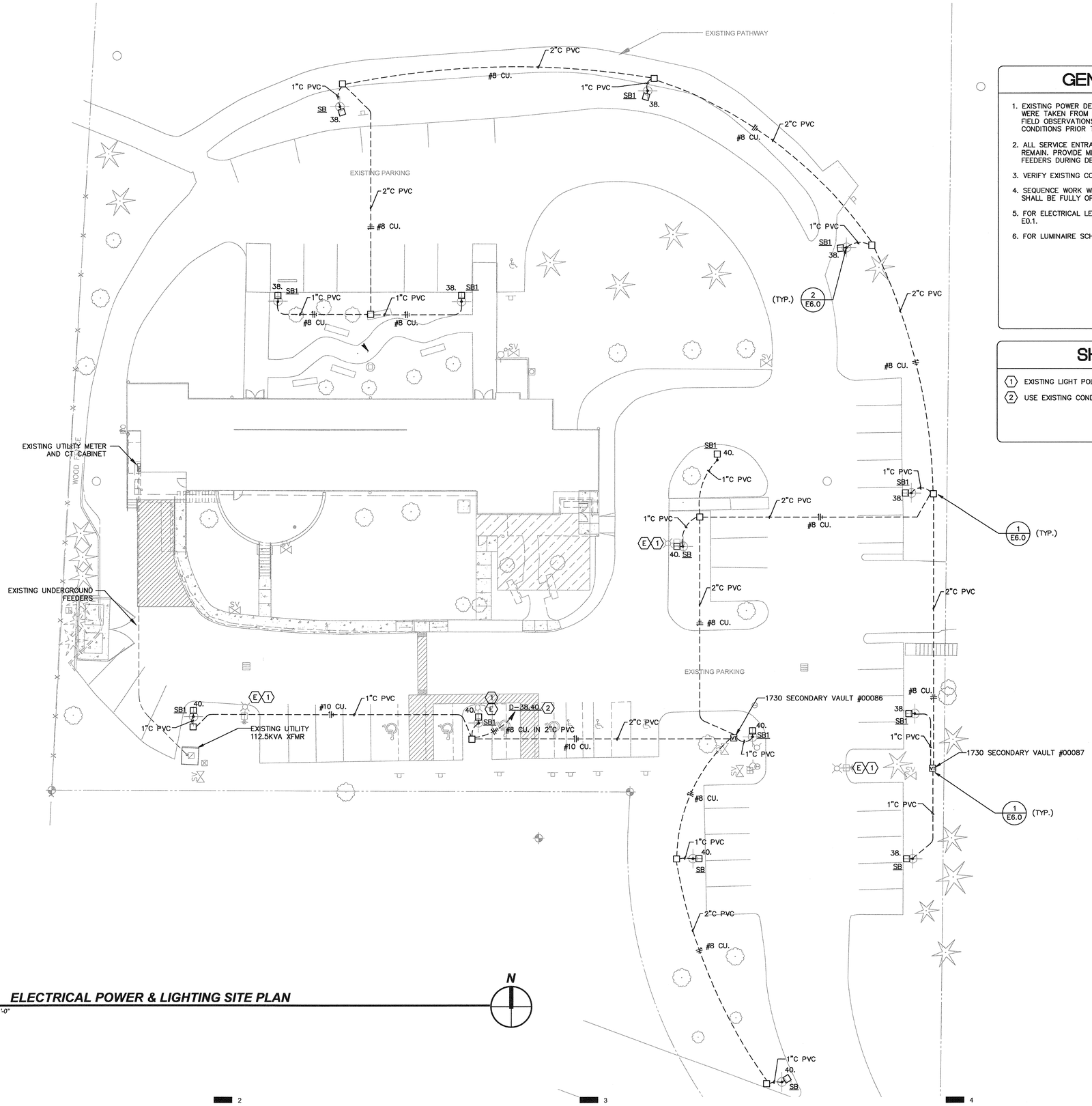

E1.0 ELECTRICAL POWER & LIGHTING SITE PLAN

SCALE: 1/16" = 1'-0"

GENERAL NOTES

1. EXISTING POWER DEVICES, CIRCUITS, FIRE ALARM, ETC. SHOWN WERE TAKEN FROM EXISTING AVAILABLE RECORD DRAWINGS AND FIELD OBSERVATIONS. CONTRACTOR TO VERIFY EXACT CONDITIONS PRIOR TO BID.
2. ALL SERVICE ENTRANCE FEEDERS (POWER, TELEPHONE) SHALL REMAIN. PROVIDE MEASURES TO PREVENT DAMAGE OF THESE FEEDERS DURING DEMOLITION.
3. VERIFY EXISTING CONDITIONS PRIOR TO SUBMITTING BID.
4. SEQUENCE WORK WITH OWNER SUCH THAT AREAS TO REMAIN SHALL BE FULLY OPERATIONAL AND TO MINIMIZE DOWNTIME.
5. FOR ELECTRICAL LEGEND AND ABBREVIATIONS SEE DRAWING E0.1.
6. FOR LUMINAIRE SCHEDULE SEE DRAWING E0.1.

SHEET NOTES

1. EXISTING LIGHT POLE TO BE REPLACED.
2. USE EXISTING CONDUIT TO PANEL D.

REGISTERED PROFESSIONAL ENGINEER 18602PE OREGON JULY 10, 1986 FLAVIANO V. REYES JR.
EXPIRES 12/31/08

LRS architects inc.
720 NW Davis
Suite 300
Portland, OR 97209
Tel. 503.221.1121
Fax. 503.221.2077

REYES ENGINEERING
RAMI R. KATAYA
ELECTRICAL DESIGNER
PASSION
CREATIVITY
SUSTAINABILITY
1733 SE Morrison Street
Portland, OR 97214
Tel: (503) 771-1986
Fax: (503) 772-2496
CONSULTANTS

TIGARD SENIOR CENTER RENOVATION AND ADDITION

8815 SW O'MARA ST.
TIGARD, OREGON 97223

ELECTRICAL POWER & LIGHTING SITE PLAN

PROJECT NAME

DATE:	09.17.07
CHECK:	FVH
DRAWN BY:	RBJ
PROJECT:	207037

E1.0

Copyright © 2005 LRS Architects, Inc.

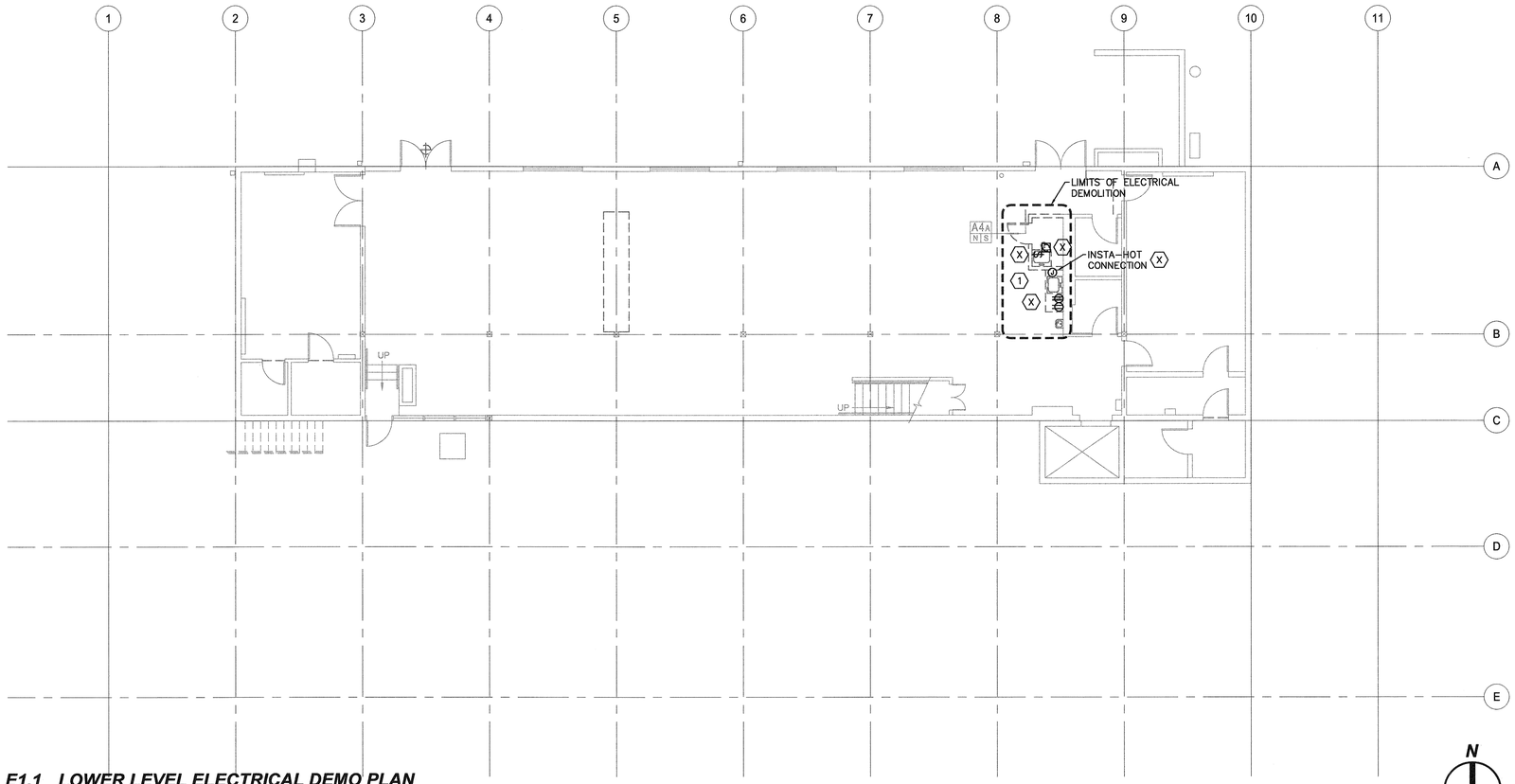

E1.1 LOWER LEVEL ELECTRICAL DEMO PLAN

SCALE: 1/8" = 1'-0"

N

GENERAL NOTES

1. EXISTING POWER DEVICES, CIRCUITS, FIRE ALARM, ETC. SHOWN WERE TAKEN FROM EXISTING AVAILABLE RECORD DRAWINGS AND FIELD OBSERVATIONS. CONTRACTOR TO VERIFY EXACT CONDITIONS PRIOR TO BID.
2. ALL SERVICE ENTRANCE FEEDERS (POWER, TELEPHONE) SHALL REMAIN. PROVIDE MEASURES TO PREVENT DAMAGE OF THESE FEEDERS DURING DEMOLITION.
3. VERIFY EXISTING CONDITIONS PRIOR TO SUBMITTING BID.
4. SEQUENCE WORK WITH OWNER SUCH THAT AREAS TO REMAIN SHALL BE FULLY OPERATIONAL AND TO MINIMIZE DOWNTIME.
5. FOR ELECTRICAL LEGEND AND ABBREVIATIONS SEE DRAWING E0.1.

SHEET NOTES

1. EXISTING FIRE ALARM DEVICES AND RECEPTACLE TO REMAIN. PROVIDE PROTECTION OF EQUIPMENT THROUGH DEMOLITION AND CONSTRUCTION.

REGISTERED PROFESSIONAL ENGINEER
18602PE
OREGON
JULY 10, 1986
FLAVIANO V. REYES JR.
EXPIRES 12/31/08

LRS architects inc.

720 NW Davis
Suite 300
Portland, OR 97209
Tel. 503.221.1121
Fax. 503.221.2077

REYES ENGINEERING
RAMI R. KATAYA
ELECTRICAL DESIGNER

PASSION
CREATIVITY
SUSTAINABILITY
1733 SE Morrison Street
Portland, OR 97214
Tel: (503) 771-1986
Fax: (503) 772-2496

CONSULTANTS

TIGARD SENIOR CENTER RENOVATION AND ADDITION
8815 SW O'MARA ST.
TIGARD, OREGON 97223
LOWER LEVEL ELECTRICAL DEMO FLOOR PLAN

PROJECT NAME

DATE: 09.17.07
CHECK: FVH
DRAWN BY: RBJ
PROJECT: 207037

E1.1

Copyright © 2005 LRS Architects, Inc.

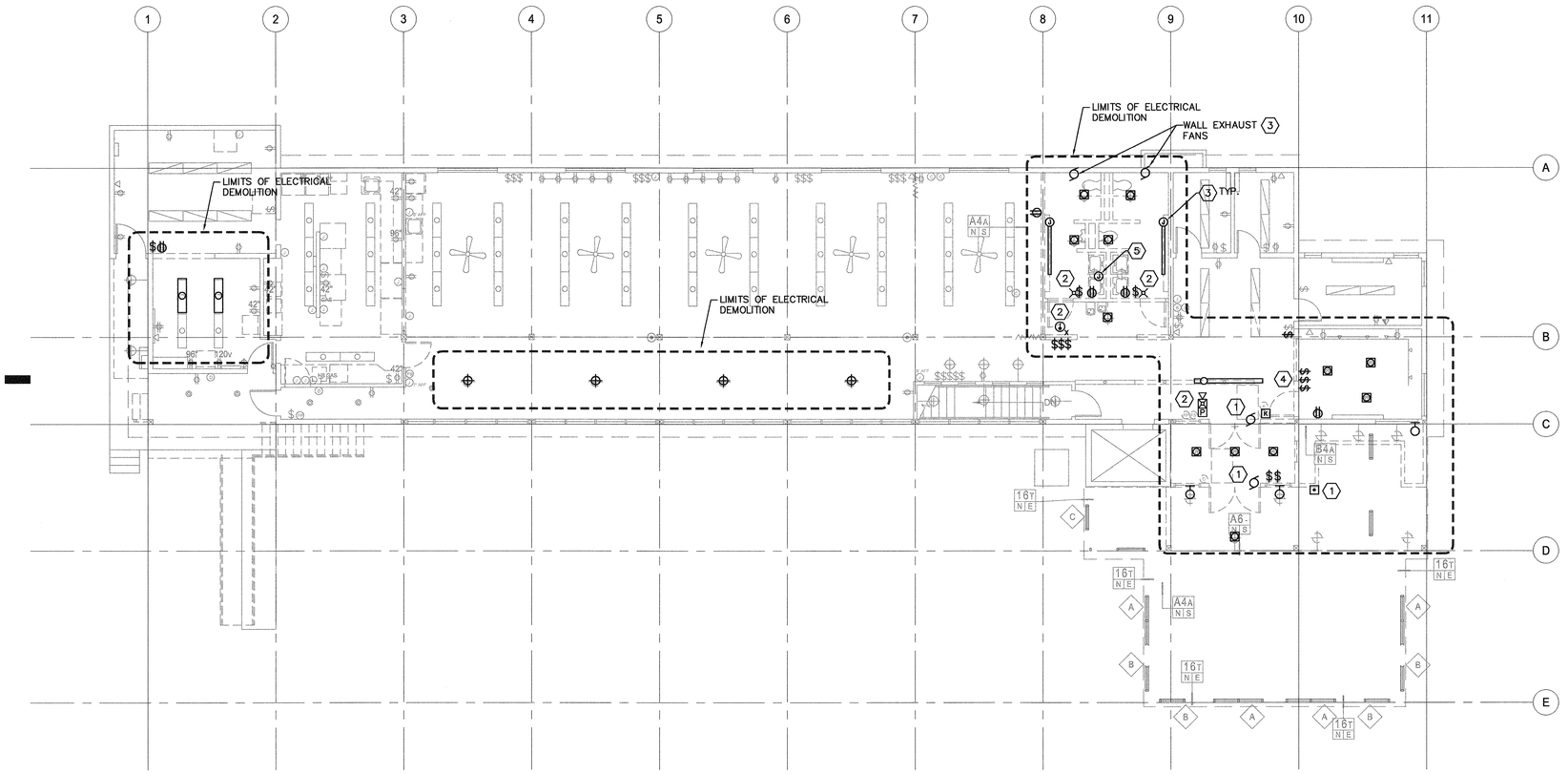

E1.2 UPPER LEVEL ELECTRICAL DEMO PLAN

SCALE: 1/8" = 1'-0"

N

GENERAL NOTES

1. EXISTING POWER DEVICES, CIRCUITS, FIRE ALARM, ETC. SHOWN WERE TAKEN FROM EXISTING AVAILABLE RECORD DRAWINGS AND FIELD OBSERVATIONS. CONTRACTOR TO VERIFY EXACT CONDITIONS PRIOR TO BID.
2. ALL SERVICE ENTRANCE FEEDERS (POWER, TELEPHONE) SHALL REMAIN. PROVIDE MEASURES TO PREVENT DAMAGE OF THESE FEEDERS DURING DEMOLITION.
3. VERIFY EXISTING CONDITIONS PRIOR TO SUBMITTING BID.
4. SEQUENCE WORK WITH OWNER SUCH THAT AREAS TO REMAIN SHALL BE FULLY OPERATIONAL AND TO MINIMIZE DOWNTIME.
5. FOR ELECTRICAL LEGEND AND ABBREVIATIONS SEE DRAWING E0.1.

SHEET NOTES

1. REMOVE AUTOMATIC DOOR OPENER MOTOR AND CONTROLS. STORE FOR REUSE.
2. REMOVE AND STORE FIRE ALARM DEVICES FOR REUSE.
3. COORDINATE WITH MECHNICAL CONTRACTOR IN THE REMOVAL OF MECHNICAL EQUIPMENT. REMOVE WIRING AND CONDUIT BACK TO CLOSEST JUNCTION BOX. RETAIN CONTINUITY OF CIRCUIT.
4. IDENTIFY EXISTING LIGHTS THAT ARE CONTROLLED BY SWITCHES MARKED FOR RELOCATION.
5. REMOVE CONNECTION TO UNDER CABINET WATER HEATER.

REGISTERED PROFESSIONAL ENGINEER 18602PE OREGON JULY 10, 1996 FLAVIANO V. REYES JR.
EXPIRES 12/31/08

LRS architects inc.
720 NW Davis
Suite 300
Portland, OR 97209
Tel. 503.221.1121
Fax. 503.221.2077

REYES ENGINEERING
RAMI R. KATAYA
ELECTRICAL DESIGNER
PASSION
CREATIVITY
SUSTAINABILITY
1733 SE Morrison Street
Portland, OR 97214
Tel: (503) 771-1986
Fax: (503) 772-2496
CONSULTANTS

TIGARD SENIOR CENTER RENOVATION AND ADDITION

8815 SW O'MARA ST.
TIGARD, OREGON 97223

UPPER LEVEL ELECTRICAL DEMO FLOOR PLAN

PROJECT NAME

DATE: 09.17.07
CHECK: FVH
DRAWN BY: RBJ
PROJECT: 207037

E1.2

Copyright © 2005 LRS Architects, Inc.

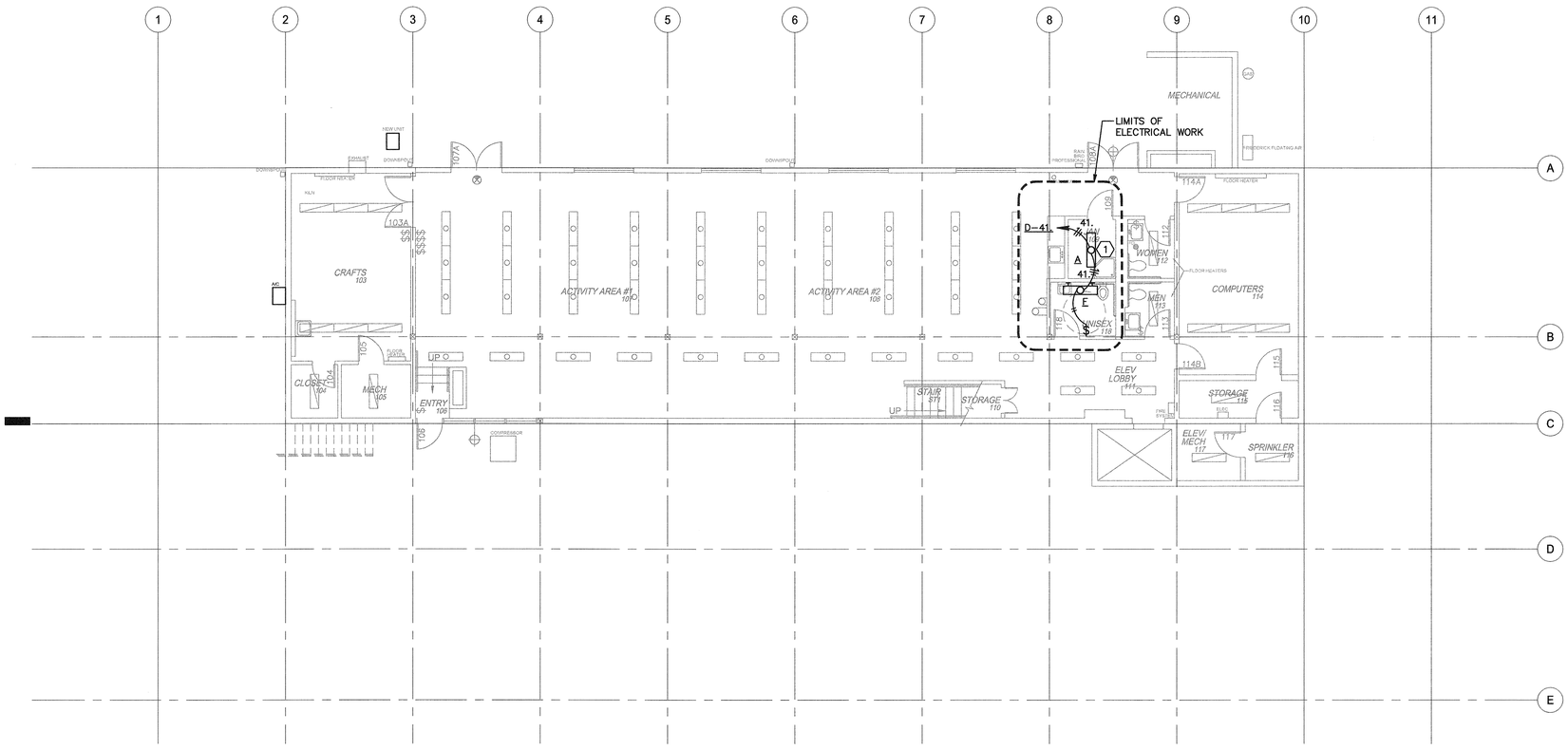

E2.0 LOWER LEVEL LIGHTING PLAN

SCALE: 1/8" = 1'-0"

N

GENERAL NOTES

1. EXISTING POWER DEVICES, CIRCUITS, FIRE ALARM, ETC. SHOWN WERE TAKEN FROM EXISTING AVAILABLE RECORD DRAWINGS AND FIELD OBSERVATIONS. CONTRACTOR TO VERIFY EXACT CONDITIONS PRIOR TO BID.
2. COORDINATE ALL CEILING WORK WITH PLUMBING AND MECHANICAL UNITS PRIOR TO ROUGH-IN.
3. ALL CONDUIT STUBBOUTS FOR LOW VOLTAGE/SIGNAL CABLES SHALL BE INSTALLED WITH INSULATED BUSHING TO PREVENT DAMAGE TO CABLES WHEN PULLING CABLES.
4. PAINT ALL EXPOSED CONDUITS, SURFACE MOUNTED RACEWAY, AND JUNCTION BOXES TO MATCH CEILING/WALL FINISH.
5. COORDINATE ALL WORK RELATED TO TELECOM/DATA INSTALLATION WITH CITY OF PORTLAND COMMUNICATIONS AND NETWORKING DEPARTMENT.
6. FOR ELECTRICAL LEGEND AND ABBREVIATIONS SEE DRAWING E0.1.
7. REFER TO E0.1 FOR LUMINAIRE SCHEDULE

SHEET NOTES

1. REUSE EXISTING LIGHTING SWITCH.

REGISTERED PROFESSIONAL ENGINEER
18802PE
OREGON
JULY 10, 1986
FLAVIANO V. REYES JR.
EXPIRES 12/31/08

LRS architects inc.

720 NW Davis
Suite 300
Portland, OR 97209
Tel. 503.221.1121
Fax. 503.221.2077

REYES ENGINEERING
RAMI R. KATAYA
ELECTRICAL DESIGNER

PASSION
CREATIVITY
SUSTAINABILITY
1733 SE Morrison Street
Portland, OR 97214
Tel: (503) 771-1986
Fax: (503) 772-2496

CONSULTANTS

TIGARD SENIOR CENTER
RENOVATION AND ADDITION
8815 SW O'MARA ST.
TIGARD, OREGON 97223
LOWER LEVEL
LIGHTING PLAN

PROJECT NAME

DATE: 09.17.07

CHECK: FVH

DRAWN BY: RBJ

PROJECT: 207037

E2.0

Copyright © 2005 LRS Architects, Inc.

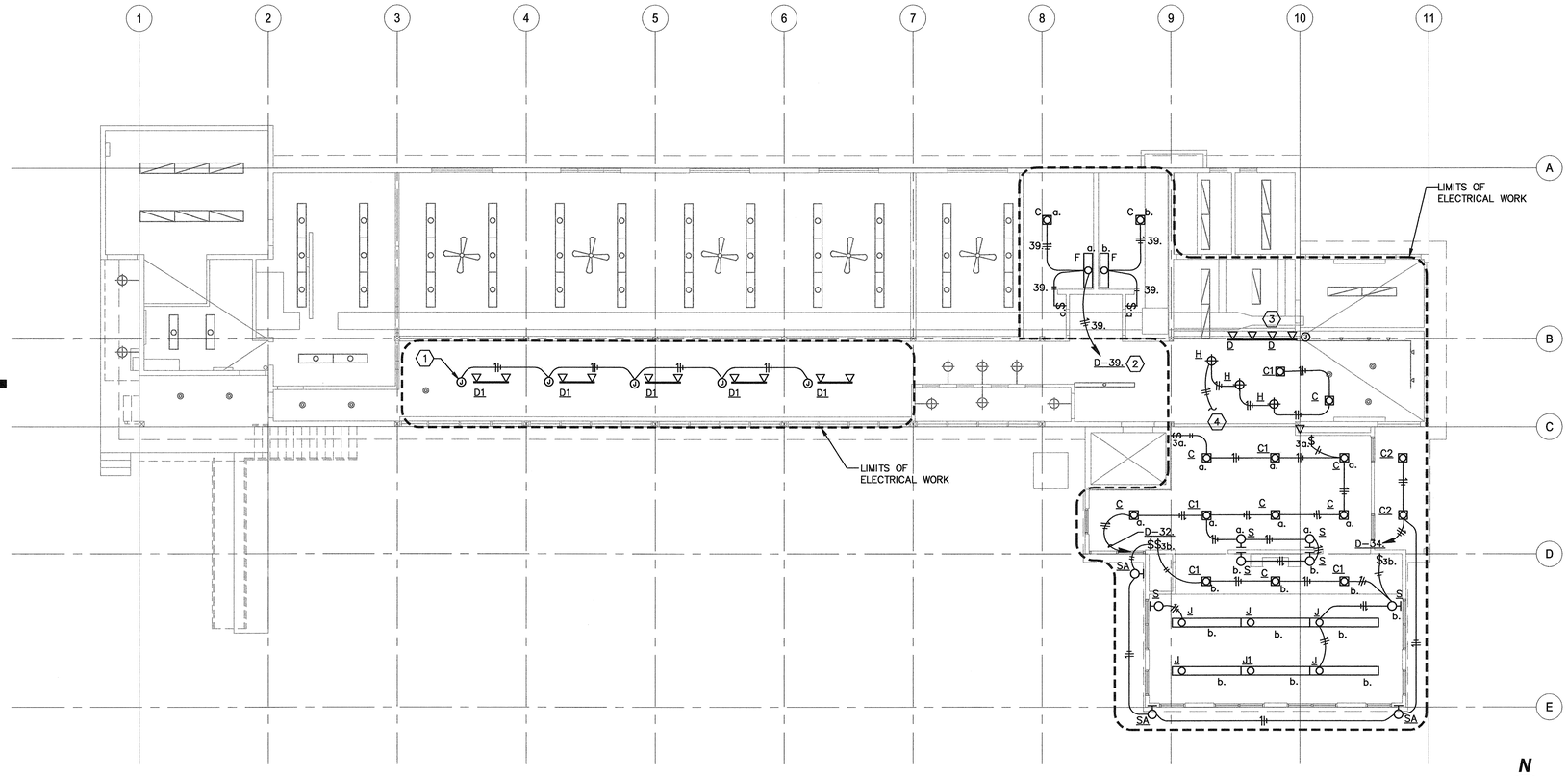

E2.1 UPPER LEVEL LIGHTING PLAN

SCALE: 1/8" = 1'-0"

N

GENERAL NOTES

1. EXISTING POWER DEVICES, CIRCUITS, FIRE ALARM, ETC. SHOWN WERE TAKEN FROM EXISTING AVAILABLE RECORD DRAWINGS AND FIELD OBSERVATIONS. CONTRACTOR TO VERIFY EXACT CONDITIONS PRIOR TO BID.
2. COORDINATE ALL CEILING WORK WITH PLUMBING AND MECHANICAL UNITS PRIOR TO ROUGH-IN.
3. ALL CONDUIT STUBBOUTS FOR LOW VOLTAGE/SIGNAL CABLES SHALL BE INSTALLED WITH INSULATED BUSHING TO PREVENT DAMAGE TO CABLES WHEN PULLING CABLES.
4. PAINT ALL EXPOSED CONDUITS, SURFACE MOUNTED RACEWAY, AND JUNCTION BOXES TO MATCH CEILING/WALL FINISH.
5. COORDINATE ALL WORK RELATED TO TELECOM/DATA INSTALLATION WITH CITY OF PORTLAND COMMUNICATIONS AND NETWORKING DEPARTMENT.
6. FOR ELECTRICAL LEGEND AND ABBREVIATIONS SEE DRAWING E0.1.
7. REFER TO E0.1 FOR LUMINAIRE SCHEDULE

SHEET NOTES

1. RE-USE EXISTING CIRCUIT.
2. SEE DRAWING E3.0 FOR PANEL D LOCATION
3. CONNECT NEW TYPE D LUMINAIRE TO EXISTING TRACK LIGHTING CIRCUIT AND SWITCH.
4. REUSE EXISTING LIGHTING CIRCUIT AND SWITCH

REGISTERED PROFESSIONAL ENGINEER 18602PE OREGON JULY 10, 1986 FLAVIANO V. REYES JR.
EXPIRES 12/31/08

LRS architects inc.
720 NW Davis
Suite 300
Portland, OR 97209
Tel. 503.221.1121
Fax. 503.221.2077

REYES ENGINEERING
RAMI R. KATAYA
ELECTRICAL DESIGNER
PASSION
CREATIVITY
SUSTAINABILITY
1733 SE Morrison Street
Portland, OR 97214
Tel: (503) 771-1986
Fax: (503) 772-2496
CONSULTANTS

TIGARD SENIOR CENTER RENOVATION AND ADDITION

8815 SW O'MARA ST.
TIGARD, OREGON 97223

UPPER LEVEL ELECTRICAL LIGHTING PLAN

PROJECT NAME

DATE: 09.17.07
CHECK: FVH
DRAWN BY: RBJ
PROJECT: 207037

E2.1

Copyright © 2005 LRS Architects, Inc.

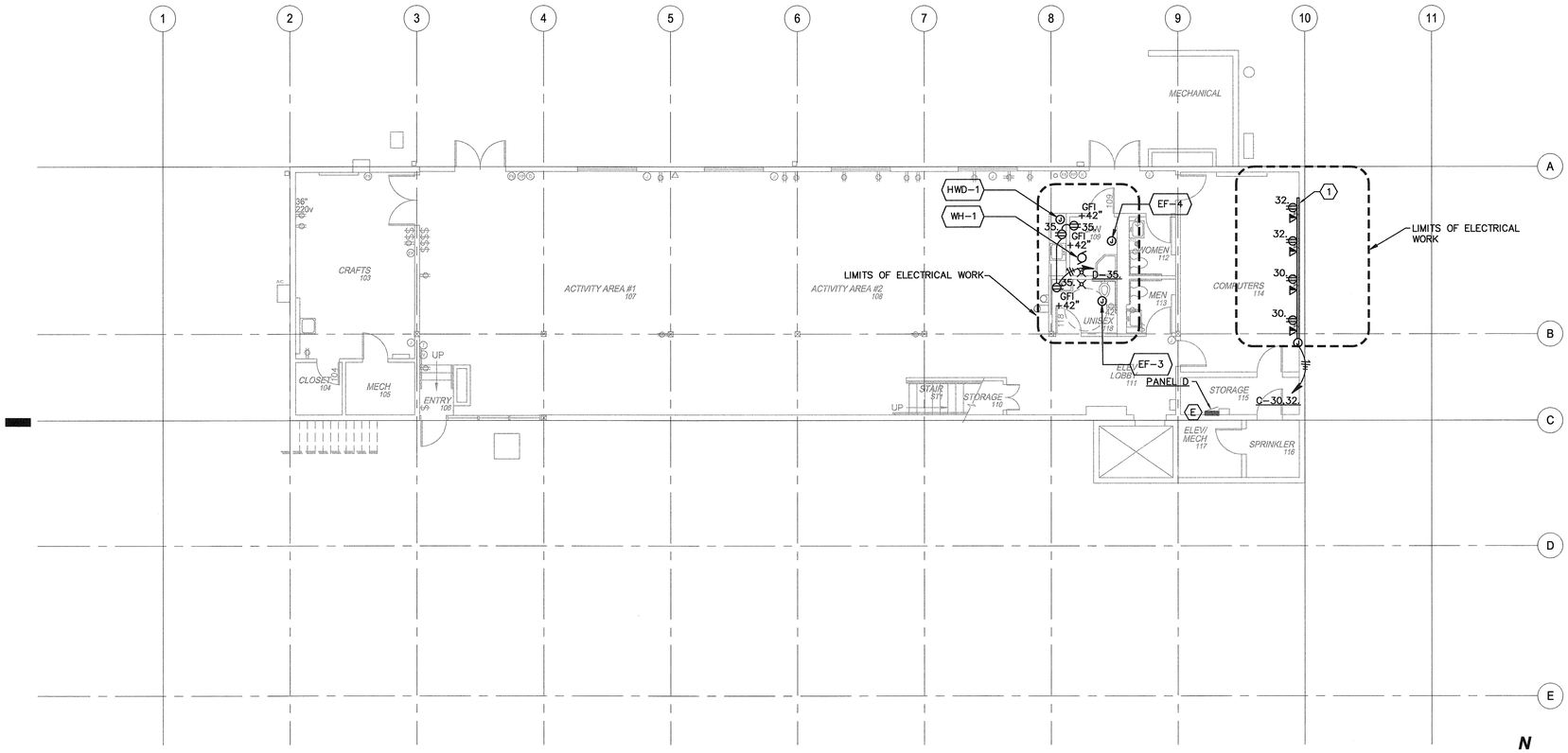

E3.0 LOWER LEVEL POWER AND SIGNAL PLAN

SCALE: 1/8" = 1'-0"

N

GENERAL NOTES

1. EXISTING POWER DEVICES, CIRCUITS, FIRE ALARM, ETC. SHOWN WERE TAKEN FROM EXISTING AVAILABLE RECORD DRAWINGS AND FIELD OBSERVATIONS. CONTRACTOR TO VERIFY EXACT CONDITIONS PRIOR TO BID.
2. COORDINATE ALL CEILING WORK WITH PLUMBING AND MECHANICAL UNITS PRIOR TO ROUGH-IN.
3. ALL CONDUIT STUBBOUTS FOR LOW VOLTAGE/SIGNAL CABLES SHALL BE INSTALLED WITH INSULATED BUSHING TO PREVENT DAMAGE TO CABLES WHEN PULLING CABLES.
4. PAINT ALL EXPOSED CONDUITS, SURFACE MOUNTED RACEWAY, AND JUNCTION BOXES TO MATCH CEILING/WALL FINISH.
5. COORDINATE ALL WORK RELATED TO TELECOM/DATA INSTALLATION WITH CITY OF TIGARD COMMUNICATIONS AND NETWORKING DEPARTMENT.
6. REFER TO ARCHITECTURAL SITE PLAN A1.0 FOR INFORMATION NOT SHOWN HERE.
7. REFER TO ELECTRICAL GENERAL NOTES ON E0.1.

SHEET NOTES

(1) PROVIDE AND INSTALL 3-CHANNEL SURFACE MOUNTED RACEWAY SIMILAR TO "HUBBELL, SUPER BASETRACK MODEL NO. PS3BX" OR EQUAL.

REGISTERED PROFESSIONAL ENGINEER 18602PE OREGON JULY 10, 1996 FLAVIANO V. REYES JR.
EXPIRES 12/31/08

LRS architects inc.
720 NW Davis
Suite 300
Portland, OR 97209
Tel. 503.221.1121
Fax. 503.221.2077

REYES ENGINEERING
RAMI R. KATAYA
ELECTRICAL DESIGNER
PASSION
CREATIVITY
SUSTAINABILITY
1733 SE Morrison Street
Portland, OR 97214
Tel: (503) 771-1986
Fax: (503) 772-2496

CONSULTANTS

TIGARD SENIOR CENTER RENOVATION AND ADDITION

8815 SW O'MARA ST.
TIGARD, OREGON 97223

LOWER LEVEL POWER AND SIGNAL PLAN

PROJECT NAME

DATE: 09.17.07
CHECK: FVH
DRAWN BY: RBJ
PROJECT: 207037

E3.0

Copyright © 2005 LRS Architects, Inc.

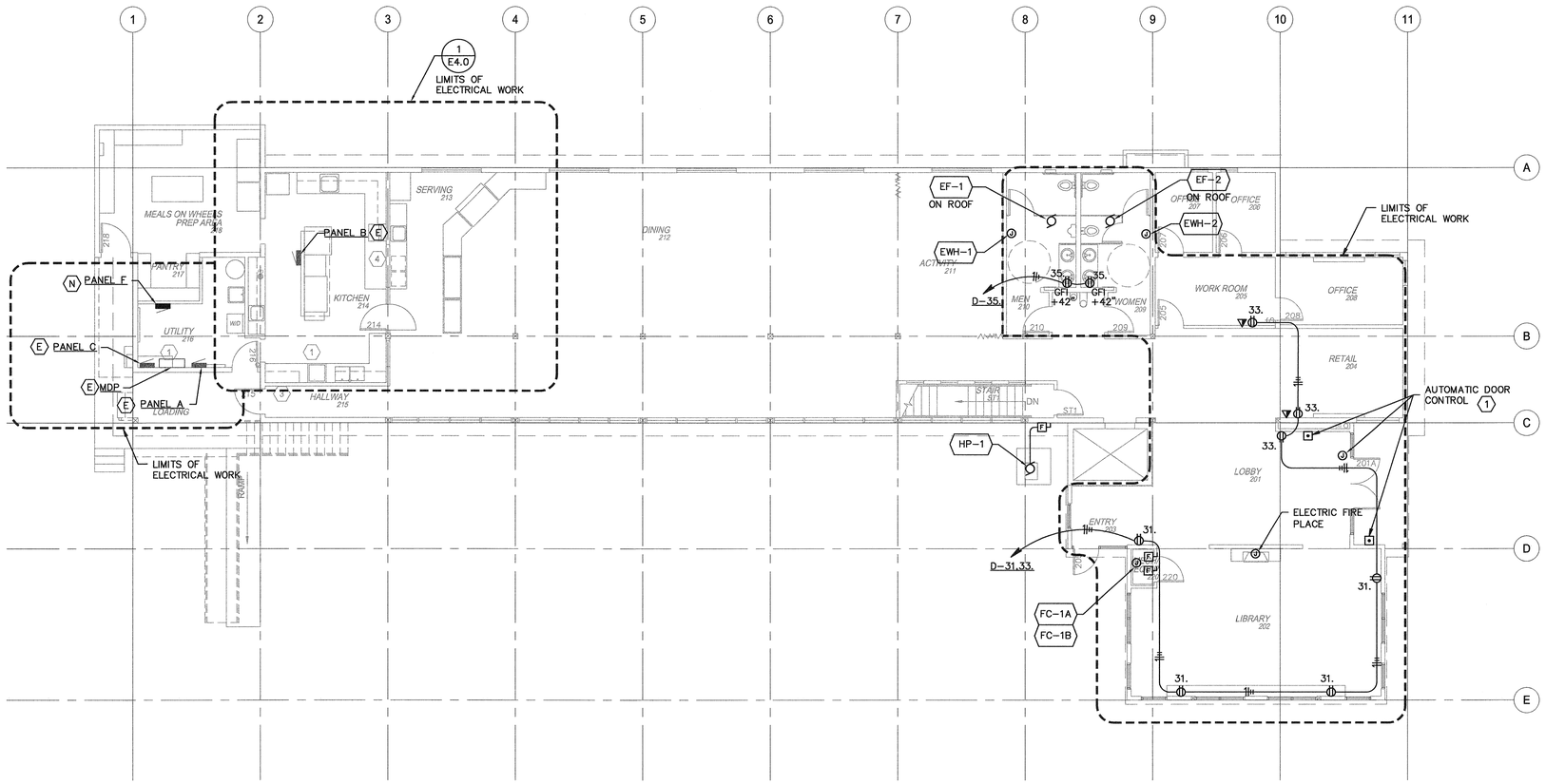

E3.1 UPPER LEVEL POWER AND SIGNAL

SCALE: 1/8" = 1'-0"

GENERAL NOTES

1. EXISTING POWER DEVICES, CIRCUITS, FIRE ALARM, ETC. SHOWN WERE TAKEN FROM EXISTING AVAILABLE RECORD DRAWINGS AND FIELD OBSERVATIONS. CONTRACTOR TO VERIFY EXACT CONDITIONS PRIOR TO BID.
2. COORDINATE ALL CEILING WORK WITH PLUMBING AND MECHANICAL UNITS PRIOR TO ROUGH-IN.
3. ALL CONDUIT STUBBOUTS FOR LOW VOLTAGE/SIGNAL CABLES SHALL BE INSTALLED WITH INSULATED BUSHING TO PREVENT DAMAGE TO CABLES WHEN PULLING CABLES.
4. PAINT ALL EXPOSED CONDUITS, SURFACE MOUNTED RACEWAY, AND JUNCTION BOXES TO MATCH CEILING/WALL FINISH.
5. COORDINATE ALL WORK RELATED TO TELECOM/DATA INSTALLATION WITH CITY OF TIGARD COMMUNICATIONS AND NETWORKING DEPARTMENT.
6. FOR ELECTRICAL LEGEND AND ABBREVIATION SEE DRAWING E0.1.
7. FOR MECHANICAL EQUIPMENT CONNECTION SCHEDULE SEE DRAWING E5.1

SHEET NOTES

1. RELOCATED AUTOMATIC DOOR CONTROL. REUSE EXISTING DOOR CONTROL CIRCUIT AND INSTALL PER MANUFACTURER'S REQUIREMENTS FOR A COMPLETE OPERABLE SYSTEM.

REGISTERED PROFESSIONAL ENGINEER 18602PE OREGON JULY 10, 1996 FLAVIANO V. REYES JR. EXPIRES 12/31/08

LRS architects inc.
720 NW Davis
Suite 300
Portland, OR 97209
Tel. 503.221.1121
Fax. 503.221.2077

REYES ENGINEERING
RAMI R. KATAYA
ELECTRICAL DESIGNER
PASSION
CREATIVITY
SUSTAINABILITY
1733 SE Morrison Street
Portland, OR 97214
Tel: (503) 771-1986
Fax: (503) 772-2496

CONSULTANTS

TIGARD SENIOR CENTER RENOVATION AND ADDITION

8815 SW O'MARA ST.
TIGARD, OREGON 97223

UPPER LEVEL POWER AND SIGNAL

PROJECT NAME

DATE: 09.17.07
CHECK: FVH
DRAWN BY: RBJ
PROJECT: 207037

E3.1

Copyright © 2005 LRS Architects, Inc.

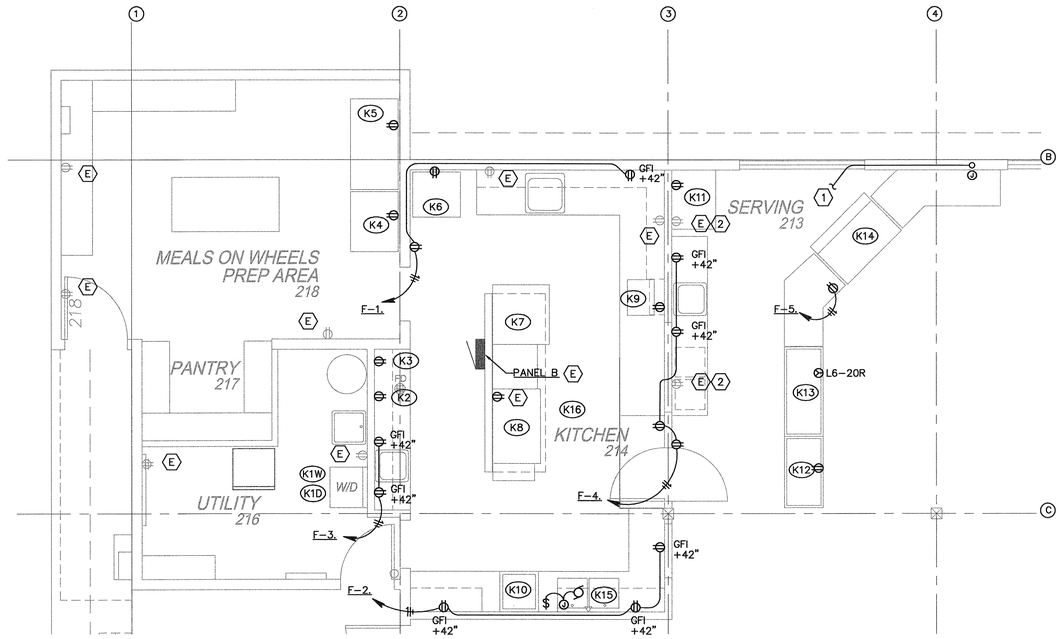

E4.0 ENLARGED KITCHEN PLAN

SCALE: 1/4"=1'-0"

N

GENERAL NOTES

1. EXISTING POWER DEVICES, CIRCUITS, FIRE ALARM, ETC. SHOWN WERE TAKEN FROM EXISTING AVAILABLE RECORD DRAWINGS AND FIELD OBSERVATIONS. CONTRACTOR TO VERIFY EXACT CONDITIONS PRIOR TO BID.
2. COORDINATE ALL CEILING WORK WITH PLUMBING AND MECHANICAL UNITS PRIOR TO ROUGH-IN.
3. ALL CONDUIT STUBBOUTS FOR LOW VOLTAGE/SIGNAL CABLES SHALL BE INSTALLED WITH INSULATED BUSHING TO PREVENT DAMAGE TO CABLES WHEN PULLING CABLES.
4. PAINT ALL EXPOSED CONDUITS, SURFACE MOUNTED RACEWAY, AND JUNCTION BOXES TO MATCH CEILING/WALL FINISH.
5. COORDINATE ALL WORK RELATED TO TELECOM/DATA INSTALLATION WITH CITY OF TIGARD COMMUNICATIONS AND NETWORKING DEPARTMENT.
6. REFER TO ARCHITECTURAL SITE PLAN A1.0 FOR INFORMATION NOT SHOWN HERE.
7. REFER TO ELECTRICAL GENERAL NOTES ON E0.1.

SHEET NOTES

1. ROUTE 1"C TO PANEL F.
2. DEMO AND RELOCATE EXISTING RECEPTACLE.

KITCHEN EQUIPMENT CONNECTION SCHEDULE

ITEM	DESCRIPTION	LOCATION	VOLTS/ PHASE	HP	KW	MCA	MOCP	FLA	FEEDER	CIRCUIT	VFD	NOTES
K1W	STACKED WASHER	UTILITY ROOM	120V	3/4			20	13.8	20A-2	B-34.		1.
K1D	STACKED DRYER	UTILITY ROOM	208V	1/3			30	3.6	30A-3	A-39,41.		2.
K2	MICROWAVE	KITCHEN	120V		1.5KW		20	--	20A-2	B-23.		NEMA 5-15
K3	ICE MACHINE	KITCHEN	120V	1/4			20	7.2	20A-2	B-21.		
K4	"REACH-IN COMMERCIAL REFRIGERATOR"	MEALS ON WHEELS PREP AREA	120V				20	7.3	20A-2	B-9.		NEMA 5-15
K5	FREEZER 49 CU FT.	MEALS ON WHEELS PREP AREA	120V				20	13.2	20A-2	B-13.		NEMA 5-15
K6	"ROLL-IN REFRIGERATOR 37 CU FT."	KITCHEN	120V				20	8.9	20A-2	B-11.		NEMA 5-15
K7	DOUBLE CONVICTION OVEN	KITCHEN	208V		12KW		75	--	75A-2	B-6,8.		
K8	"48"" STOVE, GAS COOK TOP, ELECTRIC CONVECTION OVEN BELOW"	KITCHEN	120V				20	5	20A-2	B-14.		
K9	COUNTERTOP STEAMER	KITCHEN	208V		8.3KW		45	--	45A-4	B-37,39,41.		
K10	DISHWASHER	KITCHEN	208V		8.3KW		50	--	50A-2	B-27,29.		
K11	GLASS FRONT REFRIGERATOR 23 CU FT.	SERVING	115V				20	7.9	20A-2	B-2.		NEMA 5-15
K12	"DROP-IN REFRIGERATORED WELLS"	SERVING	115V	1/5			20	4.2	20A-2	B-4.		NEMA 5-15
K13	DROP-IN HOT FOOD WELLS	SERVING	208V		3KW		20		20A-2	B-22,24.		L6-20R
K14	REFRIGERATED DISPLAY CASE	SERVING	115V				20	8.8	20A-2	B-12.		NEMA 5-15
K15	SINK DISPOSAL	SERVING	115V				20	--	20A-2	B-20.		NEMA 5-15
K16	EXISTING EXHAUST HOOD	KITCHEN	115V				--	--	EXISTING	EXISTING		

NOTES:
1. PROVIDE DEDICATED CIRCUIT.
2. PROVIDE DEDICATED SPECIAL PURPOSE RECEPT.

REGISTERED PROFESSIONAL ENGINEER
18602PE
OREGON
JULY 10, 1986
FLAVIANO V. REYES JR.
EXPIRES 12/31/08

LRS architects inc.
720 NW Davis
Suite 300
Portland, OR 97209
Tel. 503.221.1121
Fax. 503.221.2077

REYES ENGINEERING
RAMI R. KATAYA
ELECTRICAL DESIGNER

PASSION
CREATIVITY
SUSTAINABILITY
1733 SE Morrison Street
Portland, OR 97214
Tel: (503) 771-1986
Fax: (503) 772-2496

CONSULTANTS

TIGARD SENIOR CENTER
RENOVATION AND ADDITION
8815 SW O'MARA ST.
TIGARD, OREGON 97223

ENLARGED PLANS

PROJECT NAME

DATE: 09.17.07
CHECK: FVH
DRAWN BY: RBJ
PROJECT: 207037

E4.0

Copyright © 2005 LRS Architects, Inc.

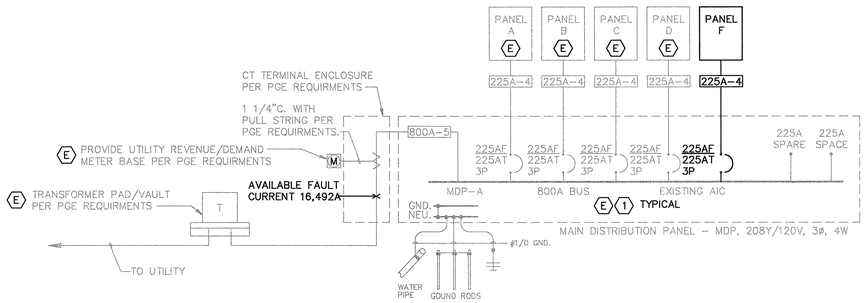

GENERAL NOTES

1. REFER TO ELECTRICAL LEGEND AND ABBREVIATION SEE DRAWING E0.1.
2. EXISTING POWER DEVICES, CIRCUITS, FIRE ALARM, ETC. SHOWN WERE TAKEN FROM EXISTING AVAILABLE RECORD DRAWINGS AND FIELD OBSERVATIONS. CONTRACTOR TO VERIFY EXACT CONDITIONS PRIOR TO BID.
3. ALL SERVICE ENTRANCE FEEDERS (POWER, TELEPHONE, CATV) SHALL REMAIN. PROVIDE MEASURES TO PREVENT DAMAGE OF THESE FEEDERS DURING CONSTRUCTION.
4. VERIFY EXISTING CONDITIONS PRIOR TO SUBMITTING BID.
5. SEQUENCE WORK WITH OWNER SUCH THAT AREAS TO REMAIN SHALL BE FULLY OPERATIONAL AND TO MINIMIZE DOWNTIME.

SHEET NOTES

1. EXISTING MAIN DISTRIBUTION PANEL AND BRANCH PANELS. VERIFY EXISTING AIC RATING FOR ALL EXISTING EQUIPMENT AND PROVIDE NEW BREAKERS WITH SAME FOR FULLY RATED SYSTEM.

LOAD SUMMARY - MDP

208Y/120V, 3ø, 4W + GRD, 800AMP BUS

EXISTING LOAD (PEAK DEMAND LOAD PER PGE):	46 KVA (128A)
REMOVED LOAD:	41 KVA (114A)
NEW LOAD:	96.5 KVA (268A)

EXISTING LOAD X 1.25 + NEW LOAD - REMOVED LOAD = BUS RATING (MDP)
[46 KVA X 1.25] + 96.5 KVA - 41 KVA = 113 KVA (313.9AMPS)

LINE TYPE LEGEND

- NEW
- EXISTING TO REMAIN
- EXISTING TO BE REMOVED

FEEDER SCHEDULE

20A-2	2 #12 CU THWN, 1 #12 CU GRD IN 1/2"C.
20A-3	3 #12 CU THWN, 1 #12 CU GRD IN 1/2"C.
30A-2	2 #10 CU THWN, 1 #10 CU GRD IN 1/2"C.
30A-3	3 #10 CU THWN, 1 #10 CU GRD IN 1/2"C.
40A-2	2 #8 CU THWN, 1 #10 CU GRD IN 3/4"C.
40A-3	3 #8 CU THWN, 1 #10 CU GRD IN 3/4"C.
60A-2	2 #6 CU THWN, 1 #10 CU GRD IN 3/4"C.
60A-3	3 #6 CU THWN, 1 #10 CU GRD IN 3/4"C.
100A-3	3 #2 CU THWN, 1 #8 CU GRD IN 2"C.
100A-4	4 #2 CU THWN, 1 #8 CU GRD IN 2"C.
150A-3	3 #2/0 CU THWN, 1 #6 CU GRD IN 2"C.
150A-4	4 #2/0 CU THWN, 1 #6 CU GRD IN 2"C.
225A-3	3 #4/0 CU THWN, 1 #4 CU GRD IN 2 1/2"C.
225A-4	4 #4/0 CU THWN, 1 #4 CU GRD IN 2 1/2"C.
400A-3	TWO SETS OF (3 #3/0 CU THWN, 1 #1 CU GRD EACH SET IN 2"C)
400A-4	TWO SETS OF (4 #3/0 CU THWN, 1 #1 CU GRD EACH SET IN 2"C)
600A-3	TWO SETS OF (3 350 KCMIL CU THWN, 1 #2/0 CU GRD EACH SET IN 3"C)
600A-4	TWO SETS OF (4 350 KCMIL CU THWN, 1 #2/0 CU GRD EACH SET IN 4"C)
800A-3	THREE SETS OF (3 300 KCMIL CU THWN, 1 #3/0 CU GRD EACH SET IN 3"C)
800A-4	THREE SETS OF (4 300 KCMIL CU THWN, 1 #3/0 CU GRD EACH SET IN 3"C)
1000A-3	FOUR SETS OF (3 400 KCMIL CU THWN, 1 #4/0 CU GRD EACH SET IN 3"C)
1000A-4	FOUR SETS OF (4 400 KCMIL CU THWN, 1 #4/0 CU GRD EACH SET IN 4"C)
1200A-3	FOUR SETS OF (3 350 KCMIL CU THWN, 1 #250 CU GRD EACH SET IN 3"C)
1200A-4	FOUR SETS OF (4 350 KCMIL CU THWN, 1 #250 CU GRD EACH SET IN 4"C)
1600A-3	FIVE SETS OF (3 400 KCMIL CU THWN, 1 #350 CU GRD EACH SET IN 3"C)
1600A-4	FIVE SETS OF (4 400 KCMIL CU THWN, 1 #350 CU GRD EACH SET IN 3"C)

E5.0 ONE-LINE DIAGRAM

SCALE: NTS

N

REGISTERED PROFESSIONAL ENGINEER 18602PE OREGON JULY 10, 1998 FLAVIANO V. REYES JR. EXPIRES 12/31/08

LRS architects inc.
720 NW Davis
Suite 300
Portland, OR 97209
Tel. 503.221.1121
Fax. 503.221.2077

REYES ENGINEERING
RAMI R. KATAYA
ELECTRICAL DESIGNER

PASSION
CREATIVITY
SUSTAINABILITY
1733 SE Morrison Street
Portland, OR 97214
Tel: (503) 771-1986
Fax: (503) 772-2496

CONSULTANTS

TIGARD SENIOR CENTER
RENOVATION AND ADDITION
8815 SW O'MARA ST.
TIGARD, OREGON 97223
LOWER LEVEL
REFLECTED CEILING PLAN

PROJECT NAME

DATE: 09.17.07
CHECK: FVH
DRAWN BY: RBJ
PROJECT: 207037

E5.0

Copyright © 2005 LRS Architects, Inc.

MECHANICAL EQUIPMENT CONNECTION SCHEDULE

ITEM	DESCRIPTION	LOCATION	VOLTS/ PHASE	HP	KW	MCA	MOCP	FLA	FEEDER	CIRCUIT	VFD	NOTES
HP-1	CONDENSING PUMP		208/1			30.4	50		50A-3	C-29,31.	-	
FC-1A	FAN COIL UNIT		208/1			53.8	60		60A-3	C-33,35.	-	
FC-1B	FAN COIL UNIT		208/1			22.7	25		25A-3	C-37,39.	-	
EF-1	EXHAUST FAN		120/1		0.83				20A-2	D-39.	-	
EF-2	EXHAUST FAN		120/1		0.83				20A-2	D-39.	-	
EF-3	EXHAUST FAN		120/1		0.83				20A-2	D-41.	-	
EF-4	EXHAUST FAN		120/1		0.83				20A-2	D-41.	-	
EWH-1	ELECTRIC WALL HEATER		208/1		1			4.8	20A-3	A-32.	-	3
EWH-2	ELECTRIC WALL HEATER		208/1		1			4.8	20A-3	A-32.	-	3
UH-1	UNIT HEATER		208/1		3.7			17.8	25A-3	A-32.	-	
WH-1	WATER HEATER				4.5				200A-3	A-22,24,26.		4
HWD-1	INSTANT HOT WATER HEATER		115/1			4.3			20A-1	A-32.		4

MECHANICAL EQUIPMENT CONNECTION NOTES

1 DISCONNECT TO BE FURNISHED AND INSTALLED BY DIVISION 16.
2 DISCONNECT TO BE PROVIDED BY DIVISION 15, INSTALLED BY DIVISION 16.
3 EXISTING CIRCUITS - DATA TAKEN FROM EXISTING PANEL SCHEDULES
4 PROVIDE NEW BREAKER

E6.0 MECHNICAL CONNECTION SCHEDULE

SCALE: NTS

GENERAL NOTES

1. REFER TO ELECTRICAL LEGEND AND ABBREVIATION SEE DRAWING E0.1.
2. EXISTING POWER DEVICES, CIRCUITS, FIRE ALARM, ETC. SHOWN WERE TAKEN FROM EXISTING AVAILABLE RECORD DRAWINGS AND FIELD OBSERVATIONS. CONTRACTOR TO VERIFY EXACT CONDITIONS PRIOR TO BID.
3. ALL SERVICE ENTRANCE FEEDERS (POWER, TELEPHONE, CATV) SHALL REMAIN. PROVIDE MEASURES TO PREVENT DAMAGE OF THESE FEEDERS DURING CONSTRUCTION.
4. VERIFY EXISTING CONDITIONS PRIOR TO SUBMITTING BID.
5. SEQUENCE WORK WITH OWNER SUCH THAT AREAS TO REMAIN SHALL BE FULLY OPERATIONAL AND TO MINIMIZE DOWNTIME.

SHEET NOTES

(1) VERIFY EXISTING AIC RATING FOR ALL EXISTING EQUIPMENT AND PROVIDE NEW BREAKERS WITH SAME FOR FULLY RATED SYSTEM.

PANEL: A
LOCATION: UTILITY ROOM
FED FROM: MDP
INCIDENT ENERGY: 0.00 J/cm2 @ 0.00(mm)
EXISTING PANEL

OC DEVICE TYPE: Breaker
DEVICE FAMILY: Bolt On

ENCLOSURE: NEMA 1
MOUNTING: Surface
VOLTAGE: 208/120
BOUNDARY: 0.00(mm)

MAINS(A): MLO
WIRING: 3-Phase 4-Wire
PPE Category:

CONTINUOUS(A): 225
AIC RATING(A): 22000
FAULT CURRENT(A) 11743

(1)

CKT	DESCRIPTION	NOTES	DEMAND CODE	VA	OC AMPS P	PHASE	OC AMPS P	VA	DEMAND CODE	NOTES	DESCRIPTION	CKT
1	HALL LIGHTS	EXISTING CKT	LIGHTING	224	20 1	A	20 1	360	RECEPTACLES	EXISTING CKT	DINING RM RECPT	2
3	HALL LIGHTS	EXISTING CKT	LIGHTING	224	20 1	B	20 1	360	RECEPTACLES	EXISTING CKT	OFFICE RECPT	4
5	SPRINKLER SYSTEM	EXISTING CKT	GENERAL LOAD	100	20 1	C	20 1	180	RECEPTACLES	EXISTING CKT	OFFICE RECPT	6
7	UPPER LVL BATH	EXISTING CKT	RECEPTACLES	180	20 1	A	20 1	180	RECEPTACLES	EXISTING CKT	UPPER BATH RM RECPT	8
9	UPPER LVL BATH LGT	EXISTING CKT	LIGHTING	128	20 1	B	20 1	360	RECEPTACLES	EXISTING CKT	POOL RM RECPT	10
11	COFFEE POTS	EXISTING CKT	HEATING	200	20 1	C	30 1	500	HEATING	EXISTING CKT	POOL RM HEATER	12
13	COFFEE POTS	EXISTING CKT	HEATING	200	20 1	A	30 1	500	HEATING	EXISTING CKT	POOL RM HEATER	14
15	CRAFT RM LIGHTS	EXISTING CKT	LIGHTING	364	20 1	B	20 1	180	RECEPTACLES	EXISTING CKT	COPIER RECPT	16
17	LOWER BAY LIGHTS	EXISTING CKT	LIGHTING	320	20 1	C	20 1	360	RECEPTACLES	EXISTING CKT	PHONE BOARD RECPT	18
19	LOWER BAY LIGHTS	EXISTING CKT	LIGHTING	320	20 1	A	20 1	180	GENERAL LOAD	EXISTING CKT	SECURITY SYSTEM	20
21	LOWER BAY LIGHTS	EXISTING CKT	LIGHTING	320	20 1	B	20 3	500	WATER HEATER	EXISTING CKT	WATER HEATER	22
23	DINING RM LIGHTS	EXISTING CKT	LIGHTING	228	20 1	C	"	500			"	24
25	DINING RM LIGHTS	EXISTING CKT	LIGHTING	228	20 1	A	"	500			"	26
27	DINING RM LIGHTS	EXISTING CKT	LIGHTING	228	20 1	B	30 2	375	HEATING	EXISTING CKT	OFFICE HEATER	28
29	DINING RM LIGHTS	EXISTING CKT	LIGHTING	228	20 1	C	"	375			"	30
31	DINING RM HTR	EXISTING CKT	HEATING	250	30 2	A	30 2	1000	HEATING	EXISTING CKT	RESTROOM HEATERS	32
33	"			250	"	B	"	1000			"	34
35	DINING RM LIGHTS	EXISTING CKT	LIGHTING	228	20 1	C	20 1	360	RECEPTACLES	EXISTING CKT	CRAFT RM RECEPT	36
37	HALL LIGHTS	EXISTING CKT	LIGHTING	300	20 1	A	20 1	300	GENERAL LOAD	EXISTING CKT	PHOTOCELL	38
39	K1D CLOTHES DRYER		MOTOR	374	30 2	B	20 1	200	MOTOR	EXISTING CKT	PADDLE FANS	40
41	"			374	"	C	20 1	200	MOTOR	EXISTING CKT	AIR TO AIR FANS	42

ALL CONNECTED	KVA	MAX PH AMPS	* PHASE TOTALS	VA	AMPS	BUS TOTALS	KVA
TOTAL CONNECTED	13.74	40.6	* A-N	4776.8	39.8	CONNECTED	13.74
TOTAL DEMAND	14.11	41.6	* B-N	4871.6	40.6	DEMAND	14.11
TOTAL DESIGN	14.95	44.2	* C-N	4175.5	34.8	DESIGN	14.95

E6.0 PANEL SCHEDULES

SCALE: NTS

REGISTERED PROFESSIONAL ENGINEER 18602PE OREGON JULY 10, 1986 FLAVIANO V. REYES, JR.
EXPIRES 12/31/08

LRS architects inc.
720 NW Davis
Suite 300
Portland, OR 97209
Tel. 503.221.1121
Fax. 503.221.2077

REYES ENGINEERING
RAMI R. KATAYA
ELECTRICAL DESIGNER
PASSION
CREATIVITY
SUSTAINABILITY
1733 SE Morrison Street
Portland, OR 97214
Tel: (503) 771-1986
Fax: (503) 772-2496
CONSULTANTS

TIGARD SENIOR CENTER
RENOVATION AND ADDITION
8815 SW O'MARA ST.
TIGARD, OREGON 97223
ELECTRICAL
CONNECTION SCHEDULES

PROJECT NAME

DATE: 09.17.07
CHECK: FVH
DRAWN BY: RBJ
PROJECT: 207037

E5.1

Copyright © 2005 LRS Architects, Inc.

PANEL: B | OC DEVICE TYPE: Breaker | ENCLOSURE: NEMA 1 | MAINS(A): MLO | CONTINUOUS(A): 225 (1)
LOCATION: UTILITY ROOM | DEVICE FAMILY: Bolt On | MOUNTING: Surface | WIRING: 3-Phase 4-Wire | AIC RATING(A): 22000
FED FROM: MDP | VOLTAGE: 208/120 | FAULT CURRENT(A) 10681
INCIDENT ENERGY(E) 0.00 J/cm2 @ 0.00(mm) | BOUNDARY: 0.00(mm) | PPE Category:
EXISTING PANEL

CKT	DESCRIPTION	NOTES	DEMAND CODE	VA	OC AMPS P	PHASE	OC AMPS P	VA	DEMAND CODE	NOTES	DESCRIPTION	CKT
1	KITCHEN RECEPT	EXISTING CKT	RECEPTACLES	360	20 1	A	20 1	948	KITCHEN	EXISTING CKT	K11 REFRIG GLASS	2
3	KITCHEN RECEPT	EXISTING CKT	RECEPTACLES	360	20 1	B	20 1	504	KITCHEN	EXISTING CKT	K12 DROP IN WELLS	4
5	HOOD, FIRE CTRL RCPT	EXISTING CKT	RECEPTACLES	180	20 1	C	75 2	6000	KITCHEN	NEW CIRCUIT	K7 DOUBLE OVEN	6
7	STEAM TABLE	EXISTING CKT	KITCHEN	250	20 1	A	"	6000			"	8
9	K4 DOUBLE REFRIG	EXISTING CKT	KITCHEN	876	20 1	B	30 1	0	SPARE		SPARE	10
11	K6 SINGLE REFRIG	EXISTING CKT	KITCHEN	1068	20 1	C	20 1	1056	KITCHEN	EXISTING CIRCU	K14 DISPLAY CASE	12
13	K5 FREEZER	EXISTING CKT	KITCHEN	876	20 1	A	20 1	600	KITCHEN	EXISTING CKT	K8 GAS RANGETOP	14
15	SPARE		SPARE	0	30 1	B	30 1	0	SPARE		SPARE	16
17	ELECTRIC HEATER	EXISTING CKT	HEATING	250	20 1	C	30 1	0	SPARE		SPARE	18
19	ELECTRIC HEATER	EXISTING CKT	HEATING	250	20 1	A	20 1	600	KITCHEN	EXISTING CKT	K15 SINK DISPOSER	20
21	K3 ICE MACHINE	EXISTING CKT	KITCHEN	864	20 1	B	20 2	1500	KITCHEN		K13 HOT FOOD WELLS	22
23	K2 MICROWAVE	EXISTING CKT	KITCHEN	1500	20 1	C	"	1500			"	24
25	SPARE	EXISTING CKT	SPARE	0	30 1	A	20 3	167	MOTOR	EXISTING CKT	K16 KITCHEN HOOD FAN	26
27	K10 DISHWASHER	EXISTING CKT	KITCHEN	4150	50 2	B	"	167			"	28
29	"			4150	"	C	"	167			"	30
31	SPARE	EXISTING CKT	SPARE	0	30 1	A	20 1	180	RECEPTACLES	EXISTING CKT	KITCHEN RECEPTACLE	32
33	KILN RECPT	EXISTING CKT	HEATING	375	20 2	B	20 1	1656	RECEPTACLES	EXISTING CKT	K1W WASHING MACHINE	34
35	"			375	"	C	20 1	360	GENERAL LOAD	EXISTING CKT	GAS WTR HTR	36
37	K9 STEAMER	EXISTING CKT	KITCHEN	2767	30 3	A	30 3	0	SPARE	EXISTING CKT	SPARE	38
39	"			2767	"	B	"	0			"	40
41	"			2767	"	C	"	0			"	42

ALL CONNECTED	KVA	MAX PH AMPS	* PHASE TOTALS	VA	AMPS	BUS TOTALS	KVA
TOTAL CONNECTED	45.59	161.3	* A-N	13451.0	112.0	CONNECTED	45.59
TOTAL DEMAND	31.33	108.7	* B-N	13668.4	113.8	DEMAND	31.33
TOTAL DESIGN	31.33	108.7	* C-N	19372.3	161.3	DESIGN	31.33

A

PANEL: D | OC DEVICE TYPE: Breaker | ENCLOSURE: NEMA 1 | MAINS(A): MLO | CONTINUOUS(A): 225
LOCATION: UTILITY ROOM | DEVICE FAMILY: Bolt On | MOUNTING: Surface | WIRING: 3-Phase 4-Wire | AIC RATING(A): 10000 (1)
FED FROM: MDP | VOLTAGE: 208/120 | FAULT CURRENT(A) 5958
EXISTING PANEL (E)

CKT	DESCRIPTION	NOTES	DEMAND CODE	VA	OC AMPS P	PHASE	OC AMPS P	VA	DEMAND CODE	NOTES	DESCRIPTION	CKT
1	RECEPTACLE	EXISTING CKT	RECEPTACLES	360	20 1	A	20 1	128	LIGHTING	EXISTING CKT	LGT PANEL/MC RM	2
3	RECEPTACLE	EXISTING CKT	RECEPTACLES	360	20 1	B	20 1	360	RECEPTACLES	EXISTING CKT	FRONT DESK 4PLEX	4
5	RETAIL RECEPT	EXISTING CKT	RECEPTACLES	360	20 1	C	20 2	400	MOTOR	EXISTING CKT	CONFERENCE A/C	6
7	STAIR LIGHTING	EXISTING CKT	LIGHTING	64	20 1	A	"	400			"	8
9	RETAIL/OFFICE HTR		HEATING	250	20 2	B	20 1	360	RECEPTACLES	EXISTING CKT	DIRECTOR RECEPT	10
11	"			250	"	C	20 1	180	RECEPTACLES	EXISTING CKT	STAIR/FLOOR RECPT	12
13	RETAIL RECEPT	EXISTING CKT	RECEPTACLES	360	20 1	A	20 1	180	RECEPTACLES	EXISTING CKT	RECEPTACLE	14
15	RECEPTACLE	EXISTING CKT	RECEPTACLES	540	20 1	B	20 1	180	RECEPTACLES	EXISTING CKT	RECEPTACLE	16
17	ENTRY HEAT	EXISTING CKT	HEATING	250	20 2	C	20 1	856	LIGHTING	EXISTING CKT	OFFICE LIGHTS	18
19	"			250	"	A	20 1	128	LIGHTING	EXISTING CKT	ENTRY LIGHTS/DOOR	20
21	FIRE ALARM	EXISTING CKT	CONTINUOUS L	120	20 1	B	20 1	360	RECEPTACLES	EXISTING CKT	RECEPTACLE	22
23	ELEVATOR LIGHT	EXISTING CKT	LIGHTING	125	20 1	C	20 1	360	RECEPTACLES	EXISTING CKT	RECEPTACLE	24
25	ELEVATOR	EXISTING CKT	LARGEST MOTO	2500	70 3	A	40 3	0	SPARE	EXISTING CKT	SPARE	26
27	"			2500	"	B	"	0			"	28
29	"			2500	"	C	"	0			"	30
31	LIBRARY RECPT	NEW CIRCUIT	RECEPTACLES	720	20 1	A	20 1	680	LIGHTING	NEW CIRCUIT	LIBRARY LIGHTS	32
33	LIBRARY RECPT	NEW CIRCUIT	RECEPTACLES	540	20 1	B	20 1	304	LIGHTING	NEW CIRCUIT	EXTERIOR LTG	34
35	RESTROOM RECPT	NEW CIRCUIT	RECEPTACLES	360	20 1	C	20 1	703	LIGHTING	NEW CIRCUIT	LOBBY LIGHTING	36
37	LOWER LEVEL BATH	NEW CIRCUIT	RECEPTACLES	360	20 1	A	20 1	801	LIGHTING	NEW CIRCUIT	EXTERIOR LTG	38
39	UPPER LVL BATH/FAN	NEW CIRCUIT	LIGHTING	426	20 1	B	20 1	700	LIGHTING	NEW CIRCUIT	EXTERIOR LTG	40
41	LOWER LVL BATH/FAN	NEW CIRCUIT	LIGHTING	426	20 1	C						42

ALL CONNECTED	KVA	MAX PH AMPS	* PHASE TOTALS	VA	AMPS	BUS TOTALS	KVA
TOTAL CONNECTED	20.70	58.3	* A-N	6940.8	57.8	CONNECTED	20.70
TOTAL DEMAND	22.61	63.8	* B-N	7002.0	58.3	DEMAND	22.61
TOTAL DESIGN	23.94	66.7	* C-N	6773.9	56.4	DESIGN	23.94

PANEL: C | OC DEVICE TYPE: Breaker | ENCLOSURE: NEMA 1 | MAINS(A): MLO | CONTINUOUS(A): 225 (1)
LOCATION: UTILITY ROOM | DEVICE FAMILY: Bolt On | MOUNTING: Surface | WIRING: 3-Phase 4-Wire | AIC RATING(A): 22000
FED FROM: MDP | VOLTAGE: 208/120 | FAULT CURRENT(A) 11743
INCIDENT ENERGY: 0.00 J/cm2 @ 0.00(mm) | BOUNDARY: 0.00(mm) | PPE Category:
EXISTING PANEL (E)

CKT	DESCRIPTION	NOTES	DEMAND CODE	VA	OC AMPS P	PHASE	OC AMPS P	VA	DEMAND CODE	NOTES	DESCRIPTION	CKT
1	SPARE	EXISTING CKT	SPARE	0	20 1	A	20 2	500	HEATING	EXISTING CKT	PANTRY HEAT	2
3	SPARE	EXISTING CKT	SPARE	0	20 1	B	"	500			"	4
5	KIT ADA DOOR	EXISTING CKT	MOTOR	400	20 1	C	50 3	333	LARGEST MOTO	EXISTING CKT	A/C SOUTH	6
7	COMPUTER	EXISTING CKT	RECEPTACLES	250	20 1	A	"	333			"	8
9	COMPUTER	EXISTING CKT	RECEPTACLES	250	20 1	B	"	333			"	10
11	COMPUTER	EXISTING CKT	RECEPTACLES	250	20 1	C	20 1	128	LIGHTING	EXISTING CKT	LIGHTS PANTRY	12
13	COMPUTER	EXISTING CKT	RECEPTACLES	250	20 1	A	20 1	360	RECEPTACLES	EXISTING CKT	PANTRY RECEPT	14
15	COMPUTER	EXISTING CKT	RECEPTACLES	250	20 1	B	20 1	360	RECEPTACLES	EXISTING CKT	PANTRY RECEPT	16
17	COMPUTER	EXISTING CKT	RECEPTACLES	250	20 1	C	20 1	360	RECEPTACLES	EXISTING CKT	PANTRY RECEPT	18
19	BASEMENT HEATER	EXISTING CKT	HEATING	300	80 3	A	20 1	360	RECEPTACLES	EXISTING CKT	PANTRY RECEPT	20
21	"			300	"	B	20 1	0	SPARE	EXISTING CKT	SPARE	22
23	"			300	"	C	20 1	0	SPARE	EXISTING CKT	SPARE	24
25	SPARE	EXISTING CKT	SPARE	0	20 1	A	20 1	0	SPARE	EXISTING CKT	SPARE	26
27	SPARE	EXISTING CKT	SPARE	0	20 1	B	20 1	0	SPARE	EXISTING CKT	SPARE	28
29	HP-1	NEW CIRCUIT	LARGEST MOTO	3162	50 2	C	20 1	500	RECEPTACLES	NEW CIRCUIT	COMPUTER	30
31	"			3162	"	A	20 1	500	RECEPTACLES	NEW CIRCUIT	COMPUTER	32
33	FC-1A	NEW CIRCUIT	HEATING	5595	60 2	B						34
35	"			5595	"	C						36
37	FC-1B	NEW CIRCUIT	MOTOR	1888	25 2	A						38
39	"			1888	"	B						40
41						C						42

ALL CONNECTED	KVA	MAX PH AMPS	* PHASE TOTALS	VA	AMPS	BUS TOTALS	KVA
TOTAL CONNECTED	28.66	94.6	* A-N	7915.9	65.9	CONNECTED	28.66
TOTAL DEMAND	30.49	101.5	* B-N	9656.0	80.4	DEMAND	30.49
TOTAL DESIGN	30.52	101.8	* C-N	11365.0	94.6	DESIGN	30.52

B

PANEL: F | OC DEVICE TYPE: Breaker | ENCLOSURE: NEMA 1 | MAINS(A): MLO | CONTINUOUS(A): 225
LOCATION: UTILITY ROOM NEW | DEVICE FAMILY: Bolt On | MOUNTING: Surface | WIRING: 3-Phase 4-Wire | AIC RATING(A): 22000
FED FROM: MDP | VOLTAGE: 208/120 | FAULT CURRENT(A) 10681
INCIDENT ENERGY: 0.00 J/cm2 @ 0.00(mm) | BOUNDARY: 0.00(mm) | PPE Category:
NEW PANEL (N)

CKT	DESCRIPTION	NOTES	DEMAND CODE	VA	OC AMPS P	PHASE	OC AMPS P	VA	DEMAND CODE	NOTES	DESCRIPTION	CKT
1	KITCHEN RECEPTACLES		RECEPTACLES	43232	20 1	A	20 1	64848	RECEPTACLES		KITCHEN RECEPTACLES	2
3	KITCHEN RECEPTACLES		RECEPTACLES	43232	20 1	B	20 1	86464	RECEPTACLES		KITCHEN RECEPTACLES	4
5	KITCHEN RECEPTACLES		RECEPTACLES	21616	20 1	C	20 1	0	SPARE		SPARE	6
7	SPARE		SPARE	0	20 1	A	20 1	0	SPARE		SPARE	8
9	SPARE		SPARE	0	20 1	B	20 1	0	SPARE		SPARE	10
11	SPARE		SPARE	0	20 1	C	20 1	0	SPARE		SPARE	12
13	SPARE		SPARE	0	20 1	A	20 1	0	SPARE		SPARE	14
15	SPARE		SPARE	0	20 1	B	20 1	0	SPARE		SPARE	16
17	SPARE		SPARE	0	20 1	C	20 1	0	SPARE		SPARE	18
19	SPARE		SPARE	0	20 1	A	20 1	0	SPARE		SPARE	20
21	SPARE		SPARE	0	20 1	B	20 1	0	SPARE		SPARE	22
23	SPARE		SPARE	0	20 1	C	20 1	0	SPARE		SPARE	24
25	SPARE		SPARE	0	20 1	A	20 1	0	SPARE		SPARE	26
27	SPARE		SPARE	0	20 1	B	20 1	0	SPARE		SPARE	28
29	SPARE		SPARE	0	20 1	C	20 1	0	SPARE		SPARE	30
31	SPARE		SPARE	0	20 1	A	20 1	0	SPARE		SPARE	32
33	SPARE		SPARE	0	20 1	B	20 1	0	SPARE		SPARE	34
35	SPARE		SPARE	0	20 1	C	20 1	0	SPARE		SPARE	36
37	SPARE		SPARE	0	20 1	A	20 1	0	SPARE		SPARE	38
39	SPARE		SPARE	0	20 1	B	20 1	0	SPARE		SPARE	40
41	SPARE		SPARE	0	20 1	C	20 1	0	SPARE		SPARE	42

ALL CONNECTED	KVA	MAX PH AMPS	* PHASE TOTALS	VA	AMPS	BUS TOTALS	KVA
TOTAL CONNECTED	259.39	1080.0	* A-N	108080.0	900.0	CONNECTED	259.39
TOTAL DEMAND	134.70	553.9	* B-N	129696.0	1080.0	DEMAND	134.70
TOTAL DESIGN	134.70	553.9	* C-N	21616.0	180.0	DESIGN	134.70

GENERAL NOTES

1. REFER TO ELECTRICAL LEGEND AND ABBREVIATION SEE DRAWING E0.1.
2. EXISTING POWER DEVICES, CIRCUITS, FIRE ALARM, ETC. SHOWN WERE TAKEN FROM EXISTING AVAILABLE RECORD DRAWINGS AND FIELD OBSERVATIONS. CONTRACTOR TO VERIFY EXACT CONDITIONS PRIOR TO BID.
3. ALL SERVICE ENTRANCE FEEDERS (POWER, TELEPHONE, CATV) SHALL REMAIN. PROVIDE MEASURES TO PREVENT DAMAGE OF THESE FEEDERS DURING CONSTRUCTION.
4. VERIFY EXISTING CONDITIONS PRIOR TO SUBMITTING BID.
5. SEQUENCE WORK WITH OWNER SUCH THAT AREAS TO REMAIN SHALL BE FULLY OPERATIONAL AND TO MINIMIZE DOWNTIME.

SHEET NOTES

(1) VERIFY EXISTING AIC RATING FOR ALL EXISTING EQUIPMENT AND PROVIDE NEW BREAKERS WITH SAME FOR FULLY RATED SYSTEM.

E5.2 PANEL SCHEDULES

SCALE: NTS

C 1 2 3 4

REGISTERED PROFESSIONAL ENGINEER 18602PE OREGON JULY 10, 1986 FLAVIANO V. REYES JR. EXPIRES 12/31/08

LRS architects inc.
720 NW Davis
Suite 300
Portland, OR 97209
Tel. 503.221.1121
Fax. 503.221.2077

REYES ENGINEERING
RAM R. KATAYA
ELECTRICAL DESIGNER

PASSION
CREATIVITY
SUSTAINABILITY
1733 SE Morrison Street
Portland, OR 97214
Tel: (503) 771-1986
Fax: (503) 772-2496

CONSULTANTS

TIGARD SENIOR CENTER
RENOVATION AND ADDITION
8815 SW O'MARA ST.
TIGARD, OREGON 97223
ELECTRICAL
PANEL SCHEDULES

PROJECT NAME

DATE: 09.17.07
CHECK: FVH
DRAWN BY: RBJ
PROJECT: 207037

E5.2

Copyright © 2005 LRS Architects, Inc.

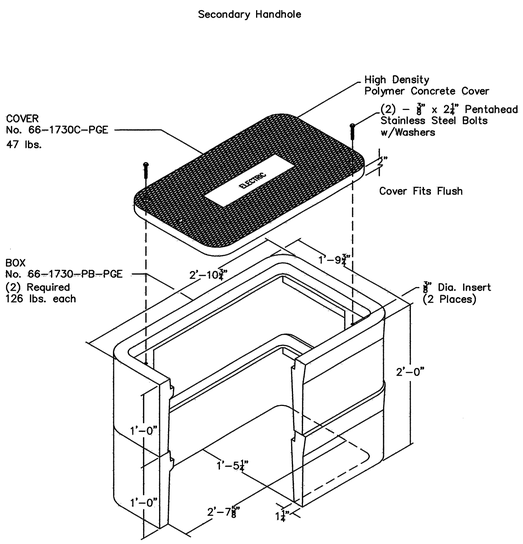

1 PGE-1730 UTILITY VAULT DETAIL

SCALE: NONE

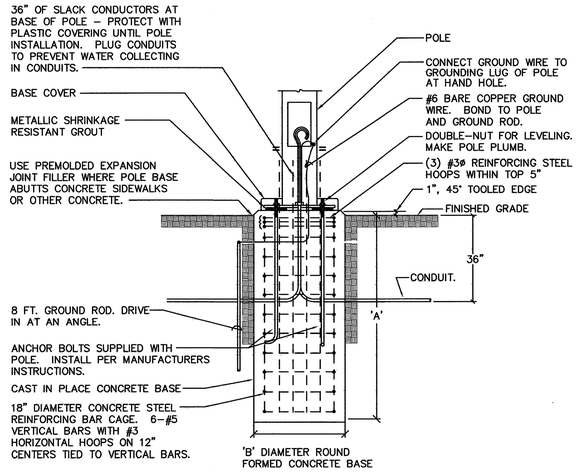

NOTE:
FIXTURE WIRE THROUGH POLE TO LUMINAIRE TO BE RATED FOR 150 F.

BASE DIMENSIONS	POLE HIEGHT			
	UP TO 15'	UP TO 22'	UP TO 35'	UP TO 40'
'A'	4' – 0"	4' – 0"	6' – 0"	7' – 0"
'B'	18"	24"	27"	24"

STANDARD PEDESTAL
2 ANCHOR BASE WITH GROUND

NONE

GENERAL NOTES

1. REFER TO ELECTRICAL LEGEND AND ABBREVIATION SEE DRAWING E0.1.
2. EXISTING POWER DEVICES, CIRCUITS, FIRE ALARM, ETC. SHOWN WERE TAKEN FROM EXISTING AVAILABLE RECORD DRAWINGS AND FIELD OBSERVATIONS. CONTRACTOR TO VERIFY EXACT CONDITIONS PRIOR TO BID.
3. ALL SERVICE ENTRANCE FEEDERS (POWER, TELEPHONE, CATV) SHALL REMAIN. PROVIDE MEASURES TO PREVENT DAMAGE OF THESE FEEDERS DURING CONSTRUCTION.
4. VERIFY EXISTING CONDITIONS PRIOR TO SUBMITTING BID.
5. SEQUENCE WORK WITH OWNER SUCH THAT AREAS TO REMAIN SHALL BE FULLY OPERATIONAL AND TO MINIMIZE DOWNTIME.

E6.0 DETAIL SHEET

SCALE: NTS

REGISTERED PROFESSIONAL ENGINEER
18602PE
OREGON
JULY 10, 1986
FLAVIANO V. REYES JR.
EXPIRES 12/31/08

LRS architects inc.
720 NW Davis
Suite 300
Portland, OR 97209
Tel. 503.221.1121
Fax. 503.221.2077

REYES ENGINEERING
RAMI R. KATAYA
ELECTRICAL DESIGNER
PASSION
CREATIVITY
SUSTAINABILITY
1733 SE Morrison Street
Portland, OR 97214
Tel: (503) 771-1986
Fax: (503) 772-2496

CONSULTANTS

TIGARD SENIOR CENTER
RENOVATION AND ADDITION
8815 SW O'MARA ST.
TIGARD, OREGON 97223
ELECTRICAL DETAILS

PROJECT NAME

DATE: 09.17.07
CHECK: FVH
DRAWN BY: RBJ
PROJECT: 207037

E6.0

Copyright © 2005 LRS Architects, Inc.