CITY OF TIGARD
OREGON

PLANS FOR PROJECT

CANTERBURY LANE
STORM SEWER LINE UPGRADE

SW CANTERBURY LANE & SW 109TH

TO BE SUPPLEMENTED BY THE OREGON STANDARD SPECIFICATIONS FOR CONSTRUCTION 2015

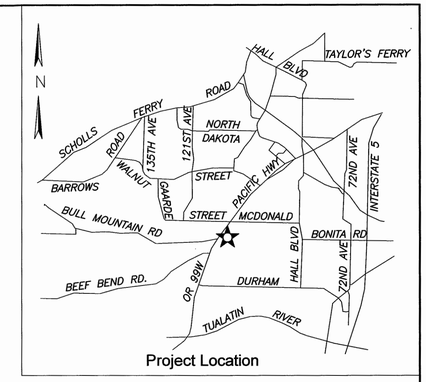

VICINITY MAP

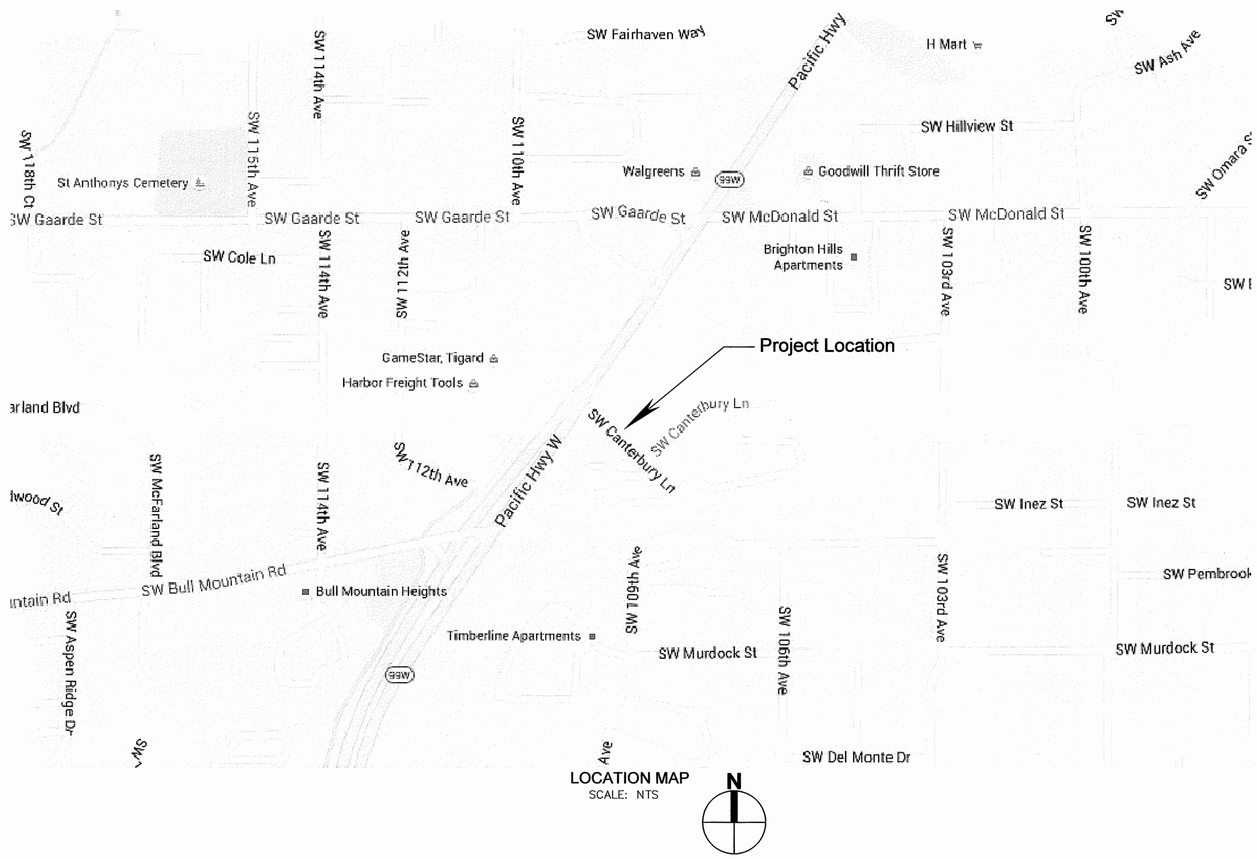

LOCATION MAP
SCALE: NTS

N

INDEX OF SHEETS

NO.	NAME	TITLE
1	C1	COVER SHEET & VICINITY MAP
2	C2	GENERAL NOTES AND LEGEND
3	C3	SW CANTERBURY LANE STA 10+00 TO STA 15+00
4	C4	SW CANTERBURY LANE STA 15+00 TO STA 19+50
5	C5	SW CANTERBURY LANE STA 19+50 TO STA 22+00
6	C6	SW 109TH STA 10+00 TO STA 13+50
7	C7	MISCELLANEOUS DETAILS
8	C8	MISCELLANEOUS DETAILS
9	C9	MISCELLANEOUS DETAILS
10	C10	MISCELLANEOUS DETAILS

QA/QC APPROVAL
THESE DOCUMENTS HAVE BEEN REVIEWED BY:
NAME: DATE: 8/2/16

HORIZONTAL DATUM:
OREGON COORDINATE REFERENCE SYSTEM LOW DISTORTION NETWORK, PORTLAND ZONE.

VERTICAL DATUM:
THE VERTICAL DATUM IS NGVD 29. HOLDING CITY OF TIGARD BENCHMARK NUMBER 214. A 3" BRASS DISC IN THE NORTH EDGE OF THE SIDEWALK ON THE SOUTH SIDE OF THE STREET, APPROXIMATELY 80' EAST OF THE INTERSECTION OF S.W. CANTERBURY LANE AND S.W. 106TH AVENUE. THE PUBLISHED ELEVATION IS 396.20 FEET.

EXISTING UTILITY LOCATIONS SHOWN ON THE DRAWINGS ARE APPROXIMATE ONLY AND ADDITIONAL UTILITIES MAY EXIST. CONTRACTOR SHALL HAVE UTILITIES LOCATED IN ACCORDANCE WITH ORS 952-001-0010 THROUGH 952-001-0090 PRIOR TO CONSTRUCTION. (ONE CALL 811 OR 800-332-2344)

811 Know what's below. Call before you dig.

PACE An Engineering Services Company
5000 Meadows Road, Suite 345
Lake Oswego, OR 97035
p. 503.597.3222 | f. 503.5975.7655
Civil | Structural | Planning | Survey
paceengrs.com

REGISTERED PROFESSIONAL ENGINEER #18309PE OREGON JAN. 16, 1986 WILLIAM M PAVLICH
RENEWS: 12/31/16

BID SET

PROJECT DESIGN OVERSIGHT APPROVAL BY:	
ENGINEERING MANAGER	
BID DATE	
16819.00	94033
PROJECT NO.	FILE NUMBER

TIGARD

CAPITAL CONSTRUCTION AND TRANSPORTATION DIVISION
13125 S.W. HALL BLVD.
TIGARD, OREGON 97223
VOICE: 503-639-4171
FAX: 503-624-0752
WWW.TIGARD-OR.GOV

Plotted by:MARK ABSLAND on Tuesday, August 02, 2016 at 10:30:46 AM from the, COVER layout tab
File: W:\PROJECTS\16819 - 109th & Canterbury Lane Storm Sewer Upgrade\DRAWINGS\SHEETS\16819S001C.DWG

LEGEND

SANITARY SEWER

- SANITARY SEWER MANHOLE
- SANITARY SEWER CLEAN OUT
- END CAP
- SS —— SS — SANITARY SEWER

STORM DRAINAGE

- STORM DRAINAGE MANHOLE
- STORM DRAINAGE CLEAN OUT
- STORM DRAINAGE CATCH BASIN
- STORM DRAINAGE AREA DRAIN/ ROUND CATCH BASIN
- STORM DRAINAGE (YARD) AREA DRAIN
- STORM DRAINAGE CURB INLET
- STORM DRAINAGE DITCH INLET
- STORM DRAINAGE TRAP DRAIN
- STORM DRAINAGE TRENCH DRAIN
- END CAP
- SD — STORM DRAIN

WATER

- WATER VALVE
- WATER BLOW–OFF VALVE
- WATER METER
- FIRE HYDRANT
- WATER STAND PIPE
- WATER FIRE DETECTION CONTROL
- WATER WELL
- WATER IRRIGATON CONTROL VALVE
- IRRIGATION SPRINKLER HEAD
- WATER MANHOLE
- DRINKING FOUNTAIN
- HOSE BIB
- W — U/G WATER LINE LOCATES

ELECTRIC

- ELECTRIC MANHOLE
- ELECTRIC METER
- ELECTRIC HAND HOLE (JUNCTION BOX)
- UP — U/G ELECTRIC LOCATES
- UTILITY POLE
- UG — UTILITY POLE W/ DROP
- UTILITY POLE W/LIGHT
- UG — UTILITY POLE W/LIGHT & DROP
- UTILITY GUY POLE
- UTILITY GUY WIRE
- ILLUMINARY
- ORNAMENTAL ILLUMINARY

NATURAL GAS

- GAS VALVE
- GAS BLOW OFF
- GAS METER
- GAS SIGN OR POST
- GAS EMERGENCY SHUT OFF
- GAS RISER
- U/G GAS LOCATES

MISCELLANEOUS

- OIL TANK FILL ACCESS
- OIL TANK VENT
- SATELITE DISH
- UTILITY VAULT
- OVERHEAD UTILITY LINE(S)

TRAFFICATION

- TRAFFIC POLE
- TRAFFIC LIGHT
- PEDESTRIAN POLE
- TRAFFIC CONTROLLER
- TRAFFIC HAND HOLE (JUNCTION BOX)
- TRF —— TRF — U/G TRAFFIC SIGNAL LINE LOCATES

PLANIMETRIC

- SIGN POST
- SIGN POST
- FLAG POLE
- PARKING METER (SINGLE)
- PARKING METER (DOUBLE)
- MAILBOX
- NEWS PAPER BOX
- NEWS PAPER BOX
- TEST PIT
- MONITORING WELL

COMMUNICATION

- COMMUNICATIONS MANHOLE
- PHONE BOOTH
- COMMUNICATIONS RISER
- UT — COMMUNICATIONS LOCATES
- FIBER OPTICS LINE LOCATES

VEGETATION

- CONIFER
- DECIDUOUS
- STUMP
- SHRUB
- EDGE OF VEGETATION

MONUMENTS

SET IR W/ YELLOW PLASTIC CAP
SET IR W/ ALUMINUM CAP
SET BRASS SCREW
SET BRASS SCREW & WASHER
SET IRON ROD W/ BLUE PLASTIC CAP
SET PK NAIL
SET PK NAIL W/ WASHER
SET HUB & TACK
SET TACK
SET SCRIBE
SET BENCH MARK
SET TEMPORARY BENCH MARK
SET CONTROL, SEE BOOK

FOUND IRON ROD
FOUND IRON ROD W/ CAP
FOUND IRON PIPE
FOUND IRON ROD W/CAP
FOUND BRASS CAP
FOUND ALUMINUM CAP
FOUND BRASS SCREW
FOUND BRASS SCREW W/WASHER
FOUND STONE
FOUND RAILROAD SPIKE
FOUND BENCHMARK
FOUND TEMPORARY BENCHMARK

GENERAL CONDITIONS

1. THE CONTRACTOR MUST COMPLY WITH ALL APPLICABLE PROVISIONS OF FEDERAL AND STATE LAW, THE TIGARD MUNICIPAL CODE, AND THE TERMS OF ANY AGREEMENT WITH THE CITY OF TIGARD REGARDING WORK TO BE DONE PURSUANT TO THIS CONTRACT.
2. THE CITY'S STANDARD SPECIFICATION FOR TRAFFIC CONTROL IS "MANUAL ON UNIFORM TRAFFIC CONTROL DEVICES FOR STREETS AND HIGHWAYS", U.S. DEPT. OF TRANSPORTATION, FHWA, CURRENT EDITION.
3. TRAFFIC CONTROL SHALL BE PROVIDED FOR BY THE CONTRACTOR IN ACCORDANCE WITH THE CITY'S STANDARD SPECIFICATIONS AND, ALSO, IN ACCORDANCE WITH A CITY (JOB SPECIFIC) APPROVED TRAFFIC CONTROL PLAN. A COPY OF THE APPROVED TRAFFIC CONTROL PLAN SHALL BE AVAILABLE AT THE WORK AREA.
4. PUBLIC ROADWAY SHALL NOT BE CLOSED TO TRAFFIC, AT ANY TIME, WITHOUT HAVING FIRST OBTAINED WRITTEN APPROVAL FROM THE CITY ENGINEER. THE CONTRACTOR IS RESPONSIBLE FOR PROVISION OF TIMELY NOTIFICATION OF TRAFFIC FLOW DISRUPTIONS TO AREA WIDE EMERGENCY SERVICES (TIGARD POLICE DEPT., TUALATIN FIRE & RESCUE) AND TO TRI–MET AND TIGARD SCHOOL DISTRICT AND OTHER SERVICE PROVIDERS.
5. ADVANCE WARNING OF IMMINENT TRAFFIC DISRUPTION SHALL BE PROVIDED TO THE GENERAL MOTORING PUBLIC BY PLACEMENT OF AN ADVANCE NOTIFICATION SIGN AT EACH END OF THE CONSTRUCTION AREA 72 HOURS (MIN.) BEFORE INITIATION OF CONSTRUCTION WORK.
6. ACCESS TO EXISTING PROPERTIES SHALL BE MAINTAINED AT ALL TIMES, INCLUDING NORMAL DELIVERY SERVICE AND MAIL SERVICE AND IF NOT, SHALL BE CAUSE FOR WORK STOPPAGE UNTIL EFFECTIVE ACCESS IS ESTABLISHED.
7. TRAFFIC CONTROL DEVICES, FLAG PERSONS, ETC., SHALL BE IN PLACE PRIOR TO INITIATION OF CONSTRUCTION WORK AND SHALL BE EFFECTIVELY MAINTAINED.
8. PURSUANT TO TIGARD MUNICIPAL CODE SECTION 7.40.180, WORK IS PERMITTED BETWEEN THE HOURS OF 7:00 A.M. TO 7:00 P.M. DAILY UNLESS OTHERWISE AUTHORIZED BY THE CITY MANAGER.
9. HOURS OF CONSTRUCTION WORK ON COLLECTOR AND ARTERIAL ROADS WILL BE LIMITED TO 9:00 A.M.–3:00 P.M. UNLESS AUTHORIZED BY THE CITY ENGINEER. NO WORK WILL BE PERMITTED ON COLLECTOR AND ARTERIAL ROADS BETWEEN 3:30 P.M. AND 9:00 A.M. UNLESS AUTHORIZED BY THE CITY ENGINEER.
10. MINIMUM TRAVEL LANE WIDTH SHALL BE TWELVE (12) FEET; PEDESTRIAN TRAVEL SHALL ALSO BE PROVIDED FOR.
11. THE CITY RESERVES THE RIGHT TO ADD TO OR MODIFY TRAFFIC CONTROL REQUIREMENTS AS MAY BE NECESSARY TO EFFECTIVELY CONTROL TRAFFIC AND TO ASSURE PUBLIC SAFETY.
12. THE CONTRACTOR SHALL NOTIFY THE CITY'S INSPECTOR, TO BE DETERMINED TWENTY–FOUR (24) HOURS PRIOR TO COMMENCING WORK, TWENTY–FOUR (24) HOURS PRIOR TO ANY STAGED INSPECTION AND AFTER COMPLETING WORK COVERED BY THE PERMIT.
13. A COPY OF THE CONTRACT AND ALL ATTACHMENTS, AND A COPY OF THE APPROVED CONSTRUCTION PLAN AND ALL AMENDMENTS SHALL BE AVAILABLE AT THE WORK AREA. ALL WORK SHALL CONFORM TO THE CONTRACT TERMS, CONDITIONS AND PROVISIONS AND TO THE CITY APPROVED CONTRACT PLANS, AND APPROVED PLAN AMENDMENTS AND TO THE CITY'S STANDARDS AND SPECIFICATIONS AND TO THESE GENERAL CONDITIONS. CHANGES TO ANY OF THE AFORESAID MUST BE APPROVED BY THE CITY, IN ADVANCE OF WORK PERFORMANCE.
14. MAINTENANCE OF THE WORK AREA AND APPROACH ROADS IS THE RESPONSIBILITY OF THE CONTRACTOR. THE WORK AREA AND APPROACH ROADS SHALL BE MAINTAINED IN A CLEAN CONDITION, FREE FROM OBSTRUCTIONS AND HAZARDS.
15. EFFECTIVE EROSION CONTROL IS REQUIRED. EROSION CONTROL DEVICES MUST BE INSTALLED AND MAINTAINED MEETING THE CLEAN WATER SERVICES AND DEQ REQUIREMENTS. THE CITY MAY AT ANY TIME ORDER CORRECTIVE ACTION AND STOPPAGE OF WORK TO ACCOMPLISH EFFECTIVE EROSION CONTROL.
16. PROPERTY DISTURBED BY CONSTRUCTION ACTIVITY SHALL BE SEEDED WITH A STANDARD GRASS MIX; SHRUBS, FLOWERS, BARK DUST, EXISTING SIGNS, PAVEMENT MARKINGS, MAILBOXES, ETC. SHALL BE REESTABLISHED, REINSTALLED OR REPLACED, WITH LIKE KIND AND MATERIAL.
17. EFFECTIVE DRAINAGE CONTROL IS REQUIRED. DRAINAGE SHALL BE CONTROLLED WITHIN THE WORK SITE AND SHALL BE SO ROUTED THAT ADJACENT PRIVATE PROPERTY, PUBLIC PROPERTY AND THE RECEIVING SYSTEM IS NOT ADVERSELY IMPACTED. THE CITY MAY AT ANY TIME ORDER CORRECTIVE ACTION AND STOPPAGE OF WORK TO ACCOMPLISH EFFECTIVE DRAINAGE CONTROL.
18. OREGON LAW REQUIRES FOLLOWING THE RULES ADOPTED BY THE OREGON UTILITY NOTIFICATION CENTER. SAID RULES ARE SET FORTH IN OAR 952–001–0010 THROUGH OAR 952–001–0080. COPIES OF SAID RULES MAY BE OBTAINED FROM THE CENTER BY CALLING 503–246–1987. IF YOU HAVE ANY QUESTION ABOUT THE RULES, CONTACT THE CENTER. NOTE: DAMAGE TO UTILITIES SHALL BE CORRECTED AT THE CONTRACTOR'S EXPENSE.
19. CONTRACTOR MUST VERIFY ALL EXISTING UTILITIES FOR BOTH VERTICAL ELEVATION AND HORIZONTAL LOCATION PRIOR TO START OF WORK (POTHOLE BEFORE DIGGING IF NECESSARY). SHOULD CONFLICTS ARISE AND REDESIGN OR RELOCATION OF FACILITIES BE NECESSARY, NOTIFY CITY FOR REVIEW AND DIRECTION. CHANGES MUST BE APPROVED BY THE CITY IN ADVANCE OF WORK PERFORMANCE.
20. A TEMPORARY HARD–SURFACE PATCH (COLD MIX A.C. OR HOT MIX BASE PAVING) SHALL BE PLACED ON TRENCHES WITHIN ROADWAYS AT THE END OF EACH DAYS WORK. NO TRENCH, ON SITE OR OFF–SITE, SHALL BE LEFT AT ANY TIME IN AN UN–SAFE CONDITION. THE CONTRACTOR IS RESPONSIBLE FOR AND IS LIABLE FOR HAZARDS OR DAMAGE RESULTING FROM THE PROSECUTION OF THE WORK.
21. WORK PROVIDED FOR UNDER THE PERMIT SHALL INCLUDE REPAIR OF EXISTING FACILITIES (ROADS, DITCHES, ETC.) AS MAY BE NECESSARY, IN THE CITY INSPECTOR'S OPINION, TO OVERCOME DETERIORATION OR DAMAGE WHICH OCCURRED AS A RESULT OF THE CONTRACTOR'S WORK. CORRECTIVE WORK SHALL BE DONE AT THE CONTRACTOR'S EXPENSE.
22. THE CONTRACTOR SHALL MAINTAIN ACCURATE AS–BUILT INFORMATION AS CONSTRUCTION PROGRESSES. THE AS–BUILT DRAWINGS SHALL SHOW ALL NEW PUBLIC IMPROVEMENTS, INCLUDING ANY REVISION MADE TO THE PREVIOUSLY APPROVED CONSTRUCTION PLANS AND, ALSO, ANY IMPROVEMENT WHICH MAY IMPACT AN EXISTING PUBLIC SYSTEM OR FACILITY. THIS INFORMATION SHALL BE AVAILABLE FOR REVIEW DURING ALL CONSTRUCTION ACTIVITIES. ALL AS–BUILT INFORMATION SHALL BE SUBMITTED TO THE CITY UPON COMPLETION OF CONSTRUCTION.

GENERAL CONDITIONS (CONT.)

23. THE CITY'S INSPECTOR MAY, AT HIS DISCRETION, REQUIRE PROVISION OF TESTS AND OR REPORTS FROM THE CONTRACTOR TO VALIDATE CLAIMS OF MATERIAL OR CONSTRUCTION ADEQUACY/COMPLIANCE. SUCH TESTS/REPORTS SHALL BE PROVIDED AT THE CONTRACTOR'S EXPENSE.
24. THE CONTRACTOR SHALL PROVIDE A COPY OF A PROPERLY EXECUTED RELEASE AND WAIVER DOCUMENT TO THE CITY FOR EACH OWNERSHIP DISTURBED BY CONSTRUCTION ACTIVITY, AS EVIDENCE OF DISTURBANCE RESOLUTION AND OWNER SATISFACTION.
25. EXISTING MONUMENTS, PROPERTY CORNERS, AND SURVEY MARKERS SHALL BE PROTECTED. REPLACEMENT SHALL BE AT THE CONTRACTOR'S EXPENSE.
26. THE CONTRACTOR SHALL PROVIDE TO THE CITY INSPECTOR, IN WRITING, THE NAMES AND 24 HOUR EMERGENCY TELEPHONE NUMBER OF TWO (2) PERSONS WHO HAVE AUTHORITY TO RESOLVE PROBLEMS, TAKE CORRECTIVE ACTION AND, IN GENERAL, WILL BE RESPONSIBLE IN CASE OF ANY EMERGENCY. THE CONTRACTOR SHALL NOTIFY THE CITY INSPECTOR, IN WRITING, OF ANY/ALL ASSIGNMENT CHANGES.
27. THE CONTRACTOR SHALL PROVIDE TO THE CITY INSPECTOR, IN WRITING, THE NAME AND 24 HOUR EMERGENCY TELEPHONE NUMBER OF A DESIGNATED "COMPETENT PERSON" RESPONSIBLE FOR CONSTRUCTION SAFETY AS PER OR–OSHA, CHAP. 437, DIV. 3 CONSTRUCTION, SUB–DIVISION P – EXCAVATIONS. THE CONTRACTOR SHALL NOTIFY THE CITY INSPECTOR OF ANY/ALL ASSIGNMENT CHANGES.
28. BEFORE PLACEMENT OF ASPHALT, THE CONTRACTOR SHALL CLEAN ALL NEW STORM SEWER LINES AND NOTIFY THE CITY TO COMPLETE A PRE–ACCEPTANCE VIDEO INSPECTION OF ALL NEW SEWER LINES. THE CONTRACTOR SHALL PROVIDE THE CITY WITH 30 DAYS OF NOTICE FOR THE VIDEO INSPECTION. ANY DEFICIENCIES SHALL BE REPAIRED BEFORE PLACEMENT OF FINAL LIFT.

NOTE:
THE EXISTING STORM DRAINAGE SYSTEM IS LIVE. DURING CONSTRUCTION, THE SYSTEM WILL BE SEVERED IN MULTIPLE LOCATIONS. CONTRACTOR SHALL CONNECT NEW PIPE TO OLD PIPE SO AS TO MAINTAIN THE FUNCTIONALITY OF THE SYSTEM WHEN NOT ON THE JOB.

NOTE:
GRATES, FROM CATCH BASINS THAT ARE REMOVED OR ABANDONED AS PART OF THE PROJECT, SHALL REMAIN PROPERTY OF THE CITY. CONTRACTOR SHALL SAVE AND RETAIN ON SITE ALL SUCH GRATES FOR PICKUP BY CITY PUBLIC WORKS STAFF.

NOTE:
THE CONTRACTOR SHALL NOT DAMAGE OR CUT EXISTING A.C. PIPE. EXCAVATE AND EXPOSE EXISTING A.C. PIPE UNTIL APPROPRIATE JOINTS ARE EXPOSED. DISCONNECT THE A.C. PIPE JOINT AND REMOVE THE APPROPRIATE SECTIONS OF A.C. PIPE WITHOUT CUTTING OR DAMAGING THEM. DISPOSE OF REMOVED A.C. PIPE IN A LEGAL MANNER AND IN CONFORMANCE WITH THE REQUIREMENTS OF AUTHORITIES CONTROLLING AIR POLLUTION AND SOLID WASTE DISPOSAL. CONTRACTOR SHALL COMPLY WITH APPLICABLE REQUIREMENTS OF OREGON REVISED STATUTES (ORS) 468A.700 THROUGH 468A.760.

REGISTERED PROFESSIONAL ENGINEER #18309PE OREGON JAN. 16, 1996 WILLIAM M PAVLICH
RENEWS: 12/31/16

BID SET

Revisions and Addendums			
Description	Date	No.	By

PACE An Engineering Services Company
5000 Meadows Road, Suite 345
Lake Oswego, OR 97035
p. 503.597.3222 | f. 503.5975.7655
Civil | Structural | Planning | Survey
paceengrs.com

TIGARD
ENGINEERING DVISION
PUBLIC WORKS DEPARTMENT
13125 S.W. HALL BLVD.
TIGARD, OREGON 97223
VOICE: 503–639–4171
FAX: 503–624–0752
WWW.TIGARD–OR.GOV

DESIGN: WP | DRAWN: MA | CHECK: JS | PROJ. NO: 16819.00 | BID ON:

CANTERBURY LANE STORM SEWER LINE UPGRADE
SW CANTERBURY LANE
GENERAL NOTES & LEGEND

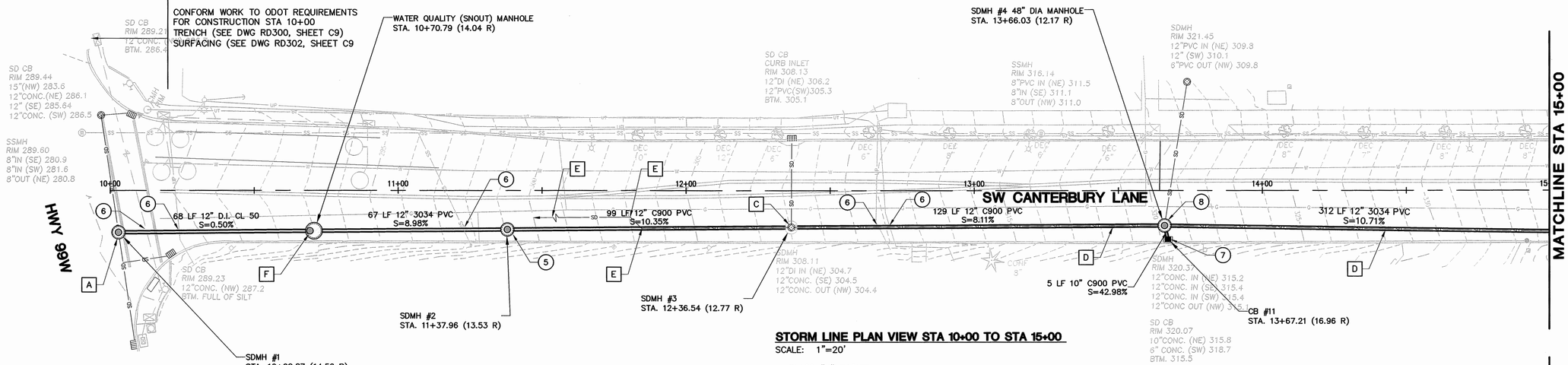

STORM LINE PLAN VIEW STA 10+00 TO STA 15+00

SCALE: 1"=20'

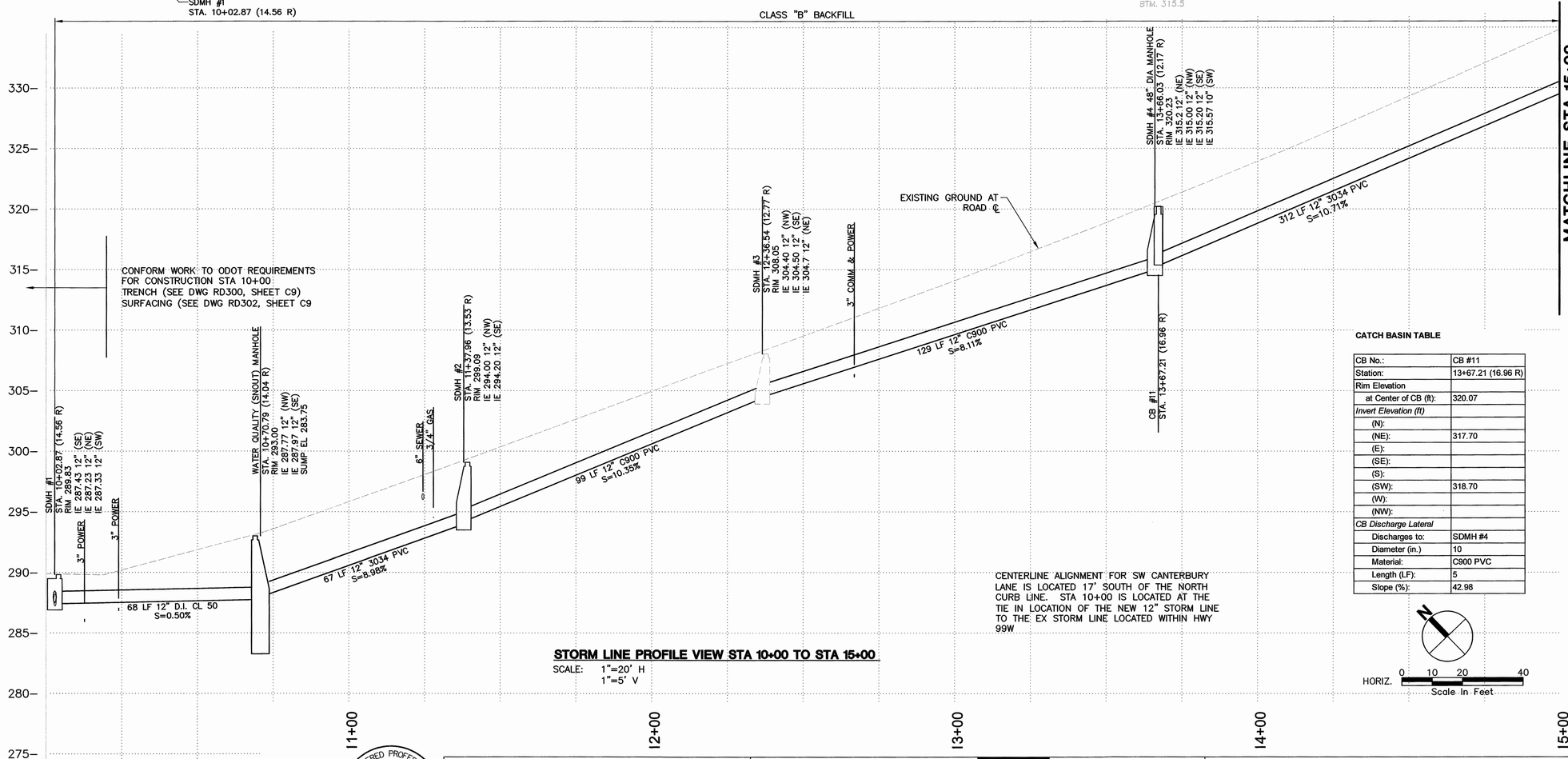

STORM LINE PROFILE VIEW STA 10+00 TO STA 15+00

SCALE: 1"=20' H
1"=5' V

CENTERLINE ALIGNMENT FOR SW CANTERBURY LANE IS LOCATED 17' SOUTH OF THE NORTH CURB LINE. STA 10+00 IS LOCATED AT THE TIE IN LOCATION OF THE NEW 12" STORM LINE TO THE EX STORM LINE LOCATED WITHIN HWY 99W

CATCH BASIN TABLE

CB No.:	CB #11
Station:	13+67.21 (16.96 R)
Rim Elevation	
at Center of CB (ft):	320.07
Invert Elevation (ft)	
(N):	
(NE):	317.70
(E):	
(SE):	
(S):	
(SW):	318.70
(W):	
(NW):	
CB Discharge Lateral	
Discharges to:	SDMH #4
Diameter (in.)	10
Material:	C900 PVC
Length (LF):	5
Slope (%):	42.98

HORIZ. 0 10 20 40
Scale In Feet

CONSTRUCTION NOTES (SHEET C3–C6)

GENERAL NOTES

1. ALL STORM DRAINAGE PIPE, MANHOLES, CATCH BASINS, AND FITTINGS SPECIFIED OR INDICATED ON THE PLANS AS NEW SHALL BE FURNISHED AND INSTALLED BY CONTRACTOR. ALL MATERIALS (EXCEPT CATCH BASIN GRATES) REMOVED SHALL BE DISPOSED OF BY CONTRACTOR UNLESS CLAIMED BY OWNER.
2. TRENCH WIDTH AT THE SURFACE OF THE GROUND SHALL BE KEPT TO A MINIMUM NECESSARY TO INSTALL THE PIPE IN A SAFE MANNER. IN ALL CASES, TRENCHES SHALL BE OF SUFFICIENT WIDTH TO ALLOW FOR SHORING, PROPER JOINING OF THE PIPE, AND BACKFILLING OF MATERIAL ALONG THE SIDES OF THE PIPE. THE MINIMUM TRENCH WIDTH IN THE PIPE ZONE SHALL PROVIDE A CLEAR WORKING SPACE OF SIX INCHES OUTSIDE THE MAXIMUM OUTSIDE DIAMETER OF THE PIPE. USE CLASS B BACKFILL (DWG 590, SHEET C9).
3. ALL ABANDONED LINES TO BE FILLED WITH CONTROLLED LOW–STRENGTH MATERIAL IN ACCORDANCE WITH ODOT 00490.43 AND MODIFIED TO INCLUDE ALL STORM WATER PIPING (MAINS AND LATERALS) 12 INCHES IN DIAMETER OR SMALLER.
4. ALL FINAL ASPHALT SURFACE REPLACEMENT SHALL BE T–CUT (DWG 180 OR RD302 AS APPPLICABLE, SHEET C9).

KEYED NOTES

5. STANDARD MANHOLE (DWG 010, SHEET C7).
6. NOTE EXISTING UTILITY – SEE PROFILE FOR DESCRIPTION.
7. REMOVE EXISTING CATCH BASIN AND REPLACE WITH NEW CG–2 CATCH BASIN, FRAME, AND GRATE (DWGS 300 AND 320; SHEET C8).
8. STANDARD MANHOLE (DWG 010; SHEET C7). CONNECT EXISTING STORM DRAIN (NE).
9. ABANDON EXISTING STORM DRAIN.
10. ABANDON EXISTING CATCH BASIN IN ACCORDANCE WITH ODOT 00490.44.
11. REMOVE EXISTING STORM DRAIN WHERE LOCATION CONFLICTS WITH CONSTRUCTION OF THE NEW STORM DRAIN.
12. CONSTRUCT FLOW THROUGH CATCH BASIN (DWGS 300 AND 320; SHEET C8).
13. FLAT TOP MANHOLE (DWG 050; C7).
14. REMOVE EXISTING STORM DRAIN.
15. PIPE SPECIFIED ON PLANS ARE ABBREVIATED FOR:
    AWWA C900 PVC
    ASTM D3034 PVC DR 35
    AWWA C151 D.I. CL 50
16. TEMPORARY AC TRENCH SURFACING TO COMPLY WITH ODOT 00495.40(b).
17. SEE NOTES ON PAGE C2 REGARDING ASBESTOS, CATCH BASIN GRATE OWNERSHIP, AND MAINTAINING FUNCTIONALITY OF THE STORM SEWER SYSTEM.

CONSTRUCTION NOTES (SHEET C3)

A. CONSTRUCT SHALLOW FLAT TOP MANHOLE (ODOT DWG RD342, SHEET C7) OVER EXISTING 12" STORM DRAIN.

B. SANITARY SEWER LATERAL (REPORTED); LOCATION AND DEPTH APPROXIMATE.

C. EXISTING MANHOLE AND NE STORM DRAIN CONNECTION TO REMAIN. CONNECT TO NEW STORM DRAIN.

D. EXISTING 12" STORM DRAIN LOCATED FROM APPROXIMATELY STA. 11+80 (SEE NOTE 8) TO STA. 16+78.01: REMOVE EXISTING 12" STORM DRAIN AND REPLACE WITH SPECIFIED PIPE AS INDICATED.

E. REPORTED 45° HORIZONTAL BEND IN EXISTING STORM DRAIN; ANGLES NORTH, THEN NORTHWEST TO THE EXISTING NE – SW STORM DRAIN ON HWY 99W (ACTUAL TIE–IN LOCATION UNKNOWN). LOCATE AND ABANDON EXISTING LINE FROM 45° HORIZONTAL BEND TO CONNECTION AT HWY 99W.

F. WATER QUALITY MH (DWG 250, SHEET C8) 60" MH DIA MIN. SUMP VOLUME 58.9 CF. MIN. SUMP DEFINED AS THE INSIDE VOLUME BETWEEN THE BOTTOM AND THE LOWEST EDGE OF THE SNOUT SEPARATOR.

BID SET

REGISTERED PROFESSIONAL ENGINEER #18309PE OREGON JAN. 16, 1996 WILLIAM M PAVLICH
RENEWS: 12/31/16

Revisions and Addendums

Description	Date	No.	By

PACE An Engineering Services Company
5000 Meadows Road, Suite 345
Lake Oswego, OR 97035
p. 503.597.3222 | f. 503.5975.7655
Civil | Structural | Planning | Survey
pacoengrs.com

TIGARD
ENGINEERING DVISION
PUBLIC WORKS DEPARTMENT
13125 S.W. HALL BLVD.
TIGARD, OREGON 97223
VOICE: 503–639–4171
FAX: 503–624–0752
WWW.TIGARD–OR.GOV

DESIGN: WP | DRAWN: MA | CHECK: JS | PROJ. NO: 16819.00 | BID ON:

CANTERBURY LANE STORM SEWER LINE UPGRADE

SW CANTERBURY LANE

STA 10+00 TO STA 15+00

SHEET C3
3 OF 10
FILE NO 94033

Plotted by:MATK ASCUNO on Tuesday, August 02, 2016 at 10:38:33 AM from the STORM 10+00–15+00.dwg layout tab
File Name(Path):U:\2016\16819 - Tigard - Canterbury Lane STORM Line Upgrade\CIVIL\DRAWINGS\STORM\STORM 10+00-15+00.dwg

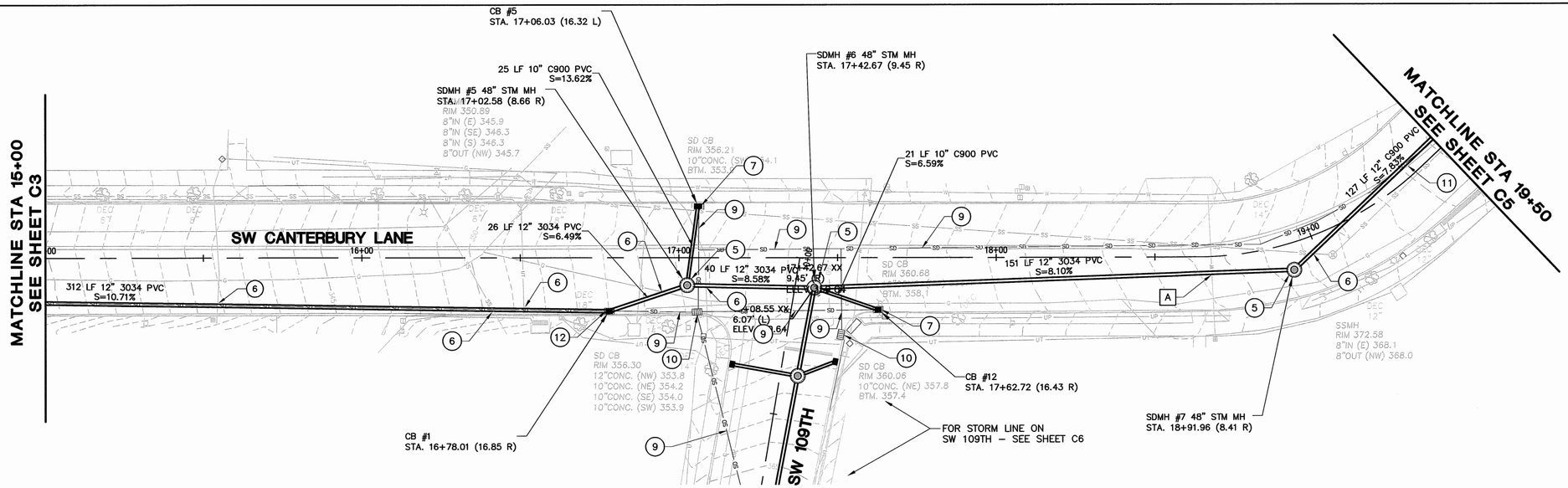

STORM LINE PLAN VIEW STA 15+00 TO STA 19+50
SCALE: 1"=20'

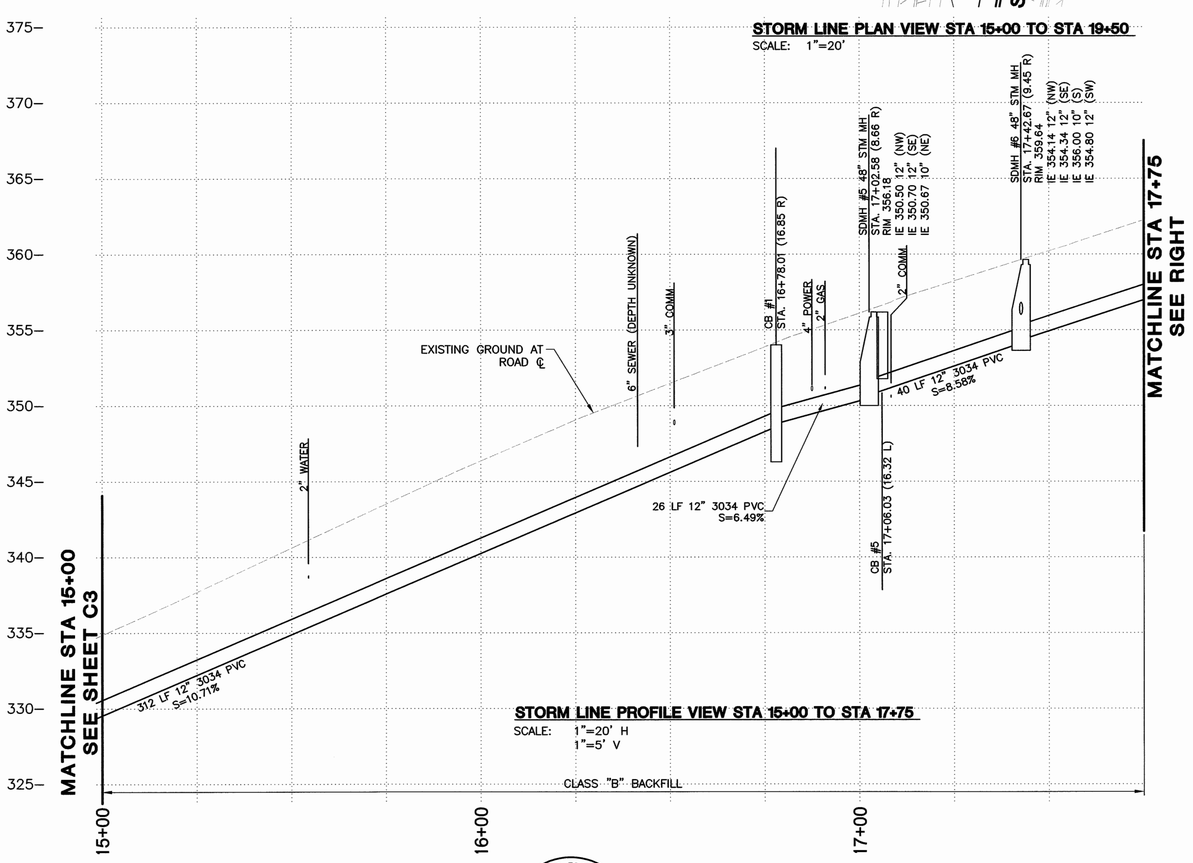

STORM LINE PROFILE VIEW STA 15+00 TO STA 17+75
SCALE: 1"=20' H
1"=5' V

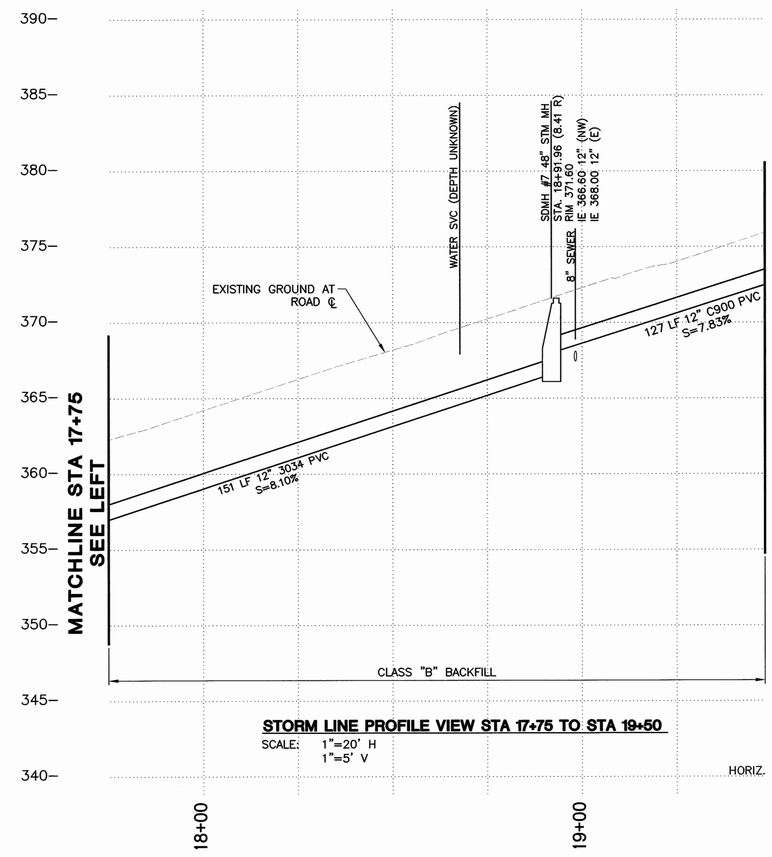

STORM LINE PROFILE VIEW STA 17+75 TO STA 19+50
SCALE: 1"=20' H
1"=5' V

HORIZ. 0 10 20 40
Scale In Feet

CONSTRUCTION NOTES (SHEET C4)

A. WATER SERVICE (DEPTH UNKNOWN).

FOR NUMBERED CONSTRUCTION NOTES SEE SHEET C3.

CATCH BASIN TABLE

CB No.:	CB #1	CB #5	CB #12
Station:	16+78.01 (16.85 R)	17+06.03 (16.32 L)	17+62.72 (16.43 R)
Rim Elevation			
at Center of CB (ft):	354.01	356.21	360.68
Invert Elevation (ft)			
(N):			357.40
(NE):			
(E):			
(SE):	348.62		
(S):			
(SW):		354.10	
(W):			
(NW):	348.62		
CB Discharge Lateral			
Discharges to:	SDMH #4	SDMH #5	SDMH #6
Diameter (in.)	12	10	10
Material:	3034 PVC	C900 PVC	C900 PVC
Length(LF):	312	25	21
Slope (%):	10.65	13.62	6.59

BID SET

REGISTERED PROFESSIONAL ENGINEER #18309PE OREGON JAN 16, 1989 WILLIAM M PAVLICH
RENEWS: 12/31/16

Revisions and Addendums			
Description	Date	No.	By

PACE An Engineering Services Company
5000 Meadows Road, Suite 345
Lake Oswego, OR 97035
p. 503.597.3222 | f. 503.5975.7655
Civil | Structural | Planning | Survey
pacoengrs.com

TIGARD
ENGINEERING DVISION
PUBLIC WORKS DEPARTMENT
13125 S.W. HALL BLVD.
TIGARD, OREGON 97223
VOICE: 503-639-4171
FAX: 503-624-0752
WWW.TIGARD-OR.GOV

DESIGN: WP | DRAWN: MA | CHECK: JS | PROJ. NO: 16819.00 | BID ON:

CANTERBURY LANE STORM SEWER LINE UPGRADE
SW CANTERBURY LANE
STA 15+00 TO STA 19+50

SHEET C4
4 OF 10
FILE NO 94033

Plotted by:MARK ASGARD on: Tuesday, August 02, 2016 at 10:40:59 AM from the STORM 15+00 – 19+50 layout tab
File Name:/home/mark/16819 – 16860 – CANTERBURY LANE STORM LINE UPGRADE/CAD/DRAWINGS/94033-P16819-STORM.dwg

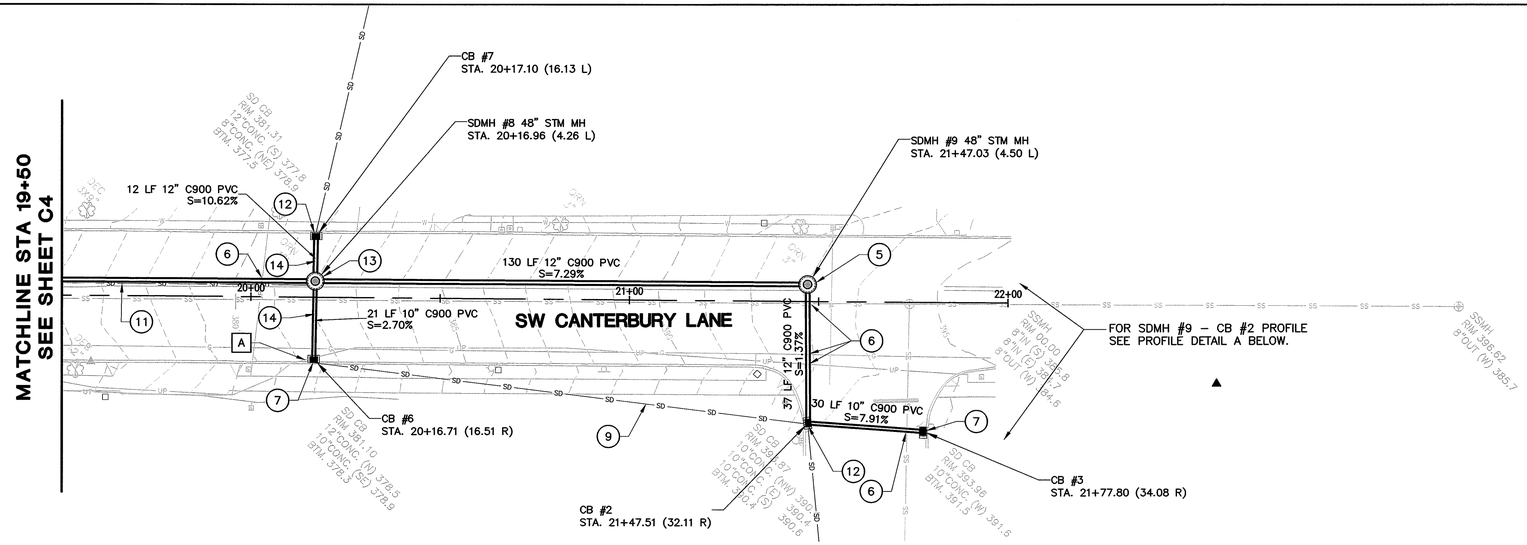

STORM LINE PLAN VIEW STA 19+50 TO STA 22+00

SCALE: 1"=20'

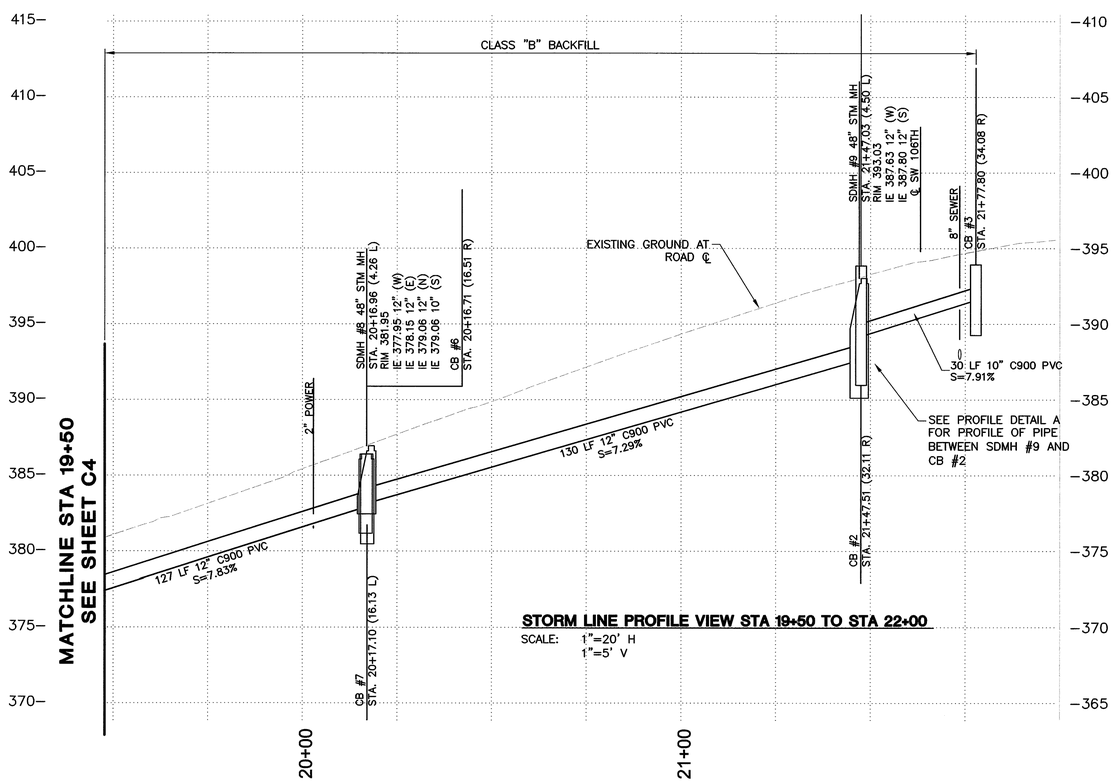

STORM LINE PROFILE VIEW STA 19+50 TO STA 22+00

SCALE: 1"=20' H
1"=5' V

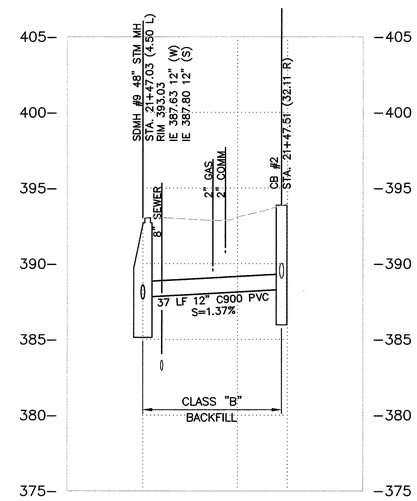

PROFILE DETAIL A

(STATION 21+47)

SCALE: 1"=20' H
1"=5' V

CONSTRUCTION NOTES (SHEET C5)

A. NOTE UTILITY (UNDERGROUND POWER). LOCATE UTILITY BY POTHOLING AND NOTIFY ENGINEER IF THERE IS A CONFLICT WITH THE PROPOSED CATCH BASIN.

FOR NUMBERED CONSTRUCTION NOTES SEE SHEET C3.

CATCH BASIN TABLE

CB No.:	CB #6	CB #7	CB #2	CB #3
Station:	20+16.71 (16.51 R)	20+17.10 (16.13 L)	21+47.51 (32.11 R)	21+77.80 (34.08 R)
Rim Elevation				
at Center of CB (ft):	381.10	381.30	393.87	393.96
Invert Elevation (ft)				
(N):	378.50	378.9 (8")	388.30	
(NE):				
(E):			389.20	
(SE):				
(S):		377.80	390.6 (10")	
(SW):				
(W):				391.60
(NW):				
CB Discharge Lateral				
Discharges to:	SDMH #8	SDMH #8	SDMH #9	CB #2
Diameter (in.)	10	12	12	10
Material:	C900 PVC	C900 PVC	C900 PVC	C900 PVC
Length(LF):	21	12	37	30
Slope (%):	2.70	10.62	1.37	7.91

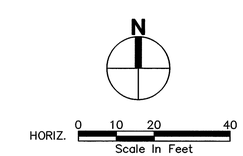

BID SET

REGISTERED PROFESSIONAL ENGINEER #18309PE OREGON JAN. 16, 1986 WILLIAM N. PAVLICH
RENEWS: 12/31/16

Revisions and Addendums			
Description	Date	No.	By

PACE An Engineering Services Company
5000 Meadows Road, Suite 345
Lake Oswego, OR 97035
p. 503.597.3222 | f. 503.5975.7655
Civil | Structural | Planning | Survey
pacoengrs.com

DESIGN: WP | DRAWN: MA | CHECK: JS

TIGARD
ENGINEERING DVISION
PUBLIC WORKS DEPARTMENT
13125 S.W. HALL BLVD.
TIGARD, OREGON 97223
VOICE: 503-639-4171
FAX: 503-624-0752
WWW.TIGARD-OR.GOV

PROJ. NO: 16819.00 | BID ON:

CANTERBURY LANE STORM SEWER LINE UPGRADE
SW CANTERBURY LANE
STA 19+50 TO STA 22+00

SHEET C5
5 OF 10
FILE NO 94033

Plotted by:MIKE AUSLAND on Tuesday, August 02, 2016 at 10:42:37 AM from the STORM 19+50 - 22+00 layout tab
File Name/Path:J:\P16\16819 - TIGARD - CANTERBURY LANE STORM LINE UPGRADE\CAD\CONTRACT SHEETS\P16819STORM.DWG

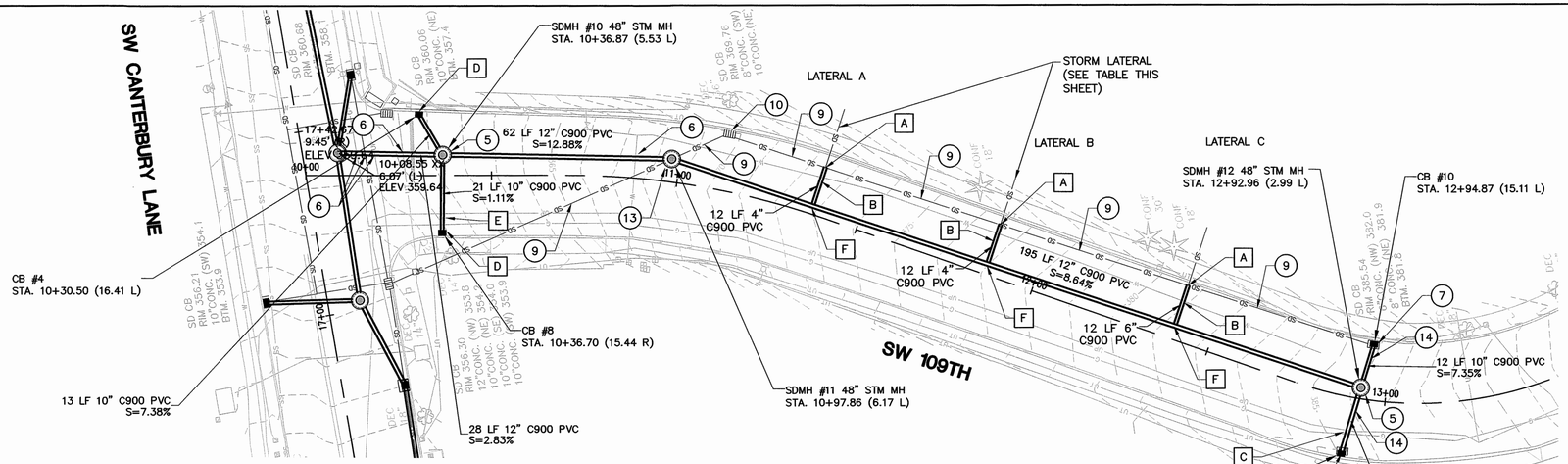

SW 109TH STORM LINE PLAN VIEW STA 10+00 TO STA 13+50

SCALE: 1"=20'

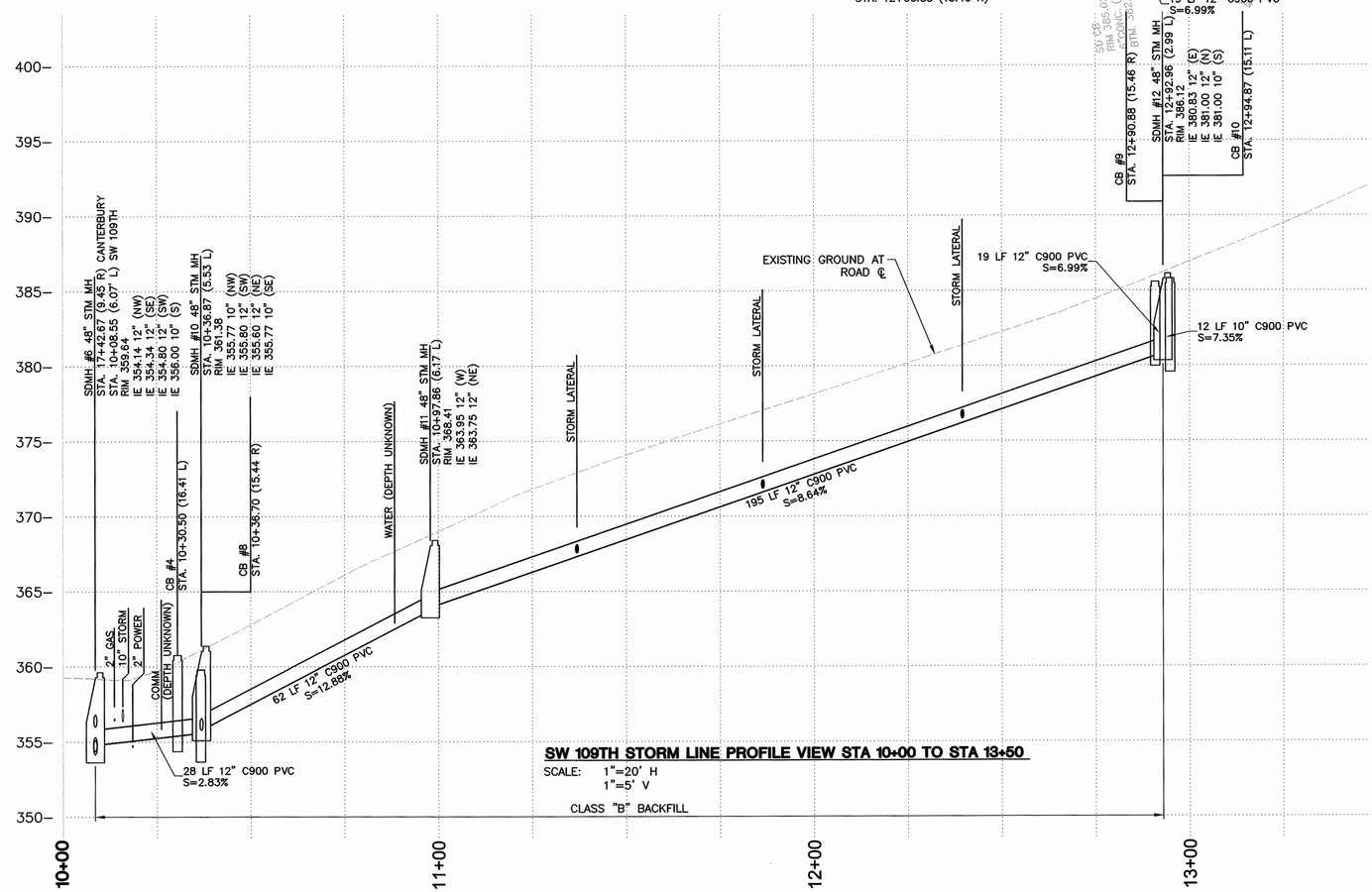

SW 109TH STORM LINE PROFILE VIEW STA 10+00 TO STA 13+50

SCALE: 1"=20' H
1"=5' V

CONSTRUCTION NOTES (SHEET C6)

A. LOCATE EXISTING STORM LATERALS AT CONNECTION WITH EXISTING 8" STORM DRAIN. ESTIMATED LOCATIONS BASED ON SEWER VIDEOS AND ARE MEASURED FROM THE DOWNSTREAM EXISTING CATCH BASIN (NEAREST EDGE) TO EACH LATERAL: EXISTING 4" LATERAL (25.8'); EXISTING 4" LATERAL (75.4'); EXISTING 6" LATERAL (128.5'). DISCONNECT EXISTING LATERALS FROM 8" DRAIN; CUT LATERAL AND GRIND AS NEEDED TO CREATE A SMOOTH AND EVEN PIPE END, AND JOIN TO THE NEW LATERALS.

B. ESTIMATED LATERAL LENGTH IS 12 LF BASED ON 10 LF SEPARATION BETWEEN THE EXISTING 8" STORM DRAIN AND THE NEW 12" STORM DRAIN, PLUS AN ALLOWANCE OF 2 LF TO COMPLETE THE CONNECTION WITH THE EXISTING STORM LATERAL.

C. ELEVATION OF EXISTING UTILITIES (GAS AND UNDERGROUND POWER) NOT KNOWN. PROPOSED PIPE FOLLOWS EXISTING STORM DRAIN ALIGNMENT. VERIFY NO CONFLICT BY POTHOLING PRIOR TO MAINLINE INSTALLATION. NOTIFY ENGINEER IF CONFLICT FOUND.

D. CONSTRUCT NEW CATCH BASIN.

E. EXISTING UTILITIES (GAS AND UNDERGROUND POWER) NOT SHOWN IN PROFILE. VERIFY NO CONFLICT BY POTHOLING PRIOR TO MAINLINE INSTALLATION. NOTIFY ENGINEER IF CONFLICT FOUND.

F. CONNECT LATERAL TO MAIN WITH INSERTA-TEES (DWG 530, SHEET C8).

FOR NUMBERED CONSTRUCTION NOTES SEE SHEET C3.

CATCH BASIN TABLE

CB No.:	CB #4	CB #8	CB #9	CB #10
Station:	10+30.50 (16.41 L)	10+36.70 (15.44 R)	12+90.88 (15.46 R)	12+94.87 (15.11 L)
Rim Elevation				
at Center of CB (ft):	360.76	359.72	385.02	385.54
Invert Elevation (ft)				
(N):				381.90
(NE):				
(E):				
(SE):		356.00		
(S):			382.30	
(SW):				
(W):				
(NW):	356.70			
CB Discharge Lateral				
Discharges to:	SDMH #10	SDMH #10	SDMH #12	SDMH #12
Diameter (in.)	10	10	12	10
Material:	C900 PVC	C900 PVC	C900 PVC	C900 PVC
Length(LF):	13	21	19	12
Slope (%):	7.38	1.11	6.99	7.35

STORM LATERAL TABLE

See also construction notes A and C on this sheet

Lateral	Lateral A	Lateral B	Lateral C
Station:	11+36.89 (2.7 L)	11+86.43 (3.4 L)	12+39.52 (4.2 L)
Diameter	4	4	6
Material	C900 PVC	C900 PVC	C900 PVC
Slope (%)	2.07	4.65	7.43
Invert @ Ex. 8" SD	367.94	372.48	377.26
Invert @ New. 12" SD	367.73	372.01	376.52
Length *	12	12	12

* See Construction note B this sheet

HORIZ. 0 10 20 40
Scale In Feet

BID SET

REGISTERED PROFESSIONAL ENGINEER #18309PE OREGON JAN. 16, 1986 WILLIAM M. PAVLICH
RENEWS: 12/31/16

Revisions and Addendums			
Description	Date	No.	By

PACE An Engineering Services Company
5000 Meadows Road, Suite 345
Lake Oswego, OR 97035
p. 503.597.3222 | f. 503.5975.7655
Civil | Structural | Planning | Survey
pacoengrs.com

TIGARD
ENGINEERING DVISION
PUBLIC WORKS DEPARTMENT
13125 S.W. HALL BLVD.
TIGARD, OREGON 97223
VOICE: 503-639-4171
FAX: 503-624-0752
WWW.TIGARD-OR.GOV

DESIGN: WP | DRAWN: MA | CHECK: JS | PROJ. NO: 16819.00 | BID ON:

CANTERBURY LANE STORM SEWER LINE UPGRADE
SW 109TH
STA 10+00 TO STA 13+50

SHEET C6
6 OF 10
FILE NO 94033

Plotted by:MARK ASGARD on Tuesday, August 02, 2016 at 10:43:44 AM from the STORM 10-00 – 13-50.dwg out
File Name:/Users/PLOT/PLOT16819 – 16860 – CANTERBURY LANE STORM LINE UPGRADE/CAD/CONSTRUCTION/SHEETS/16819-STORM.DWG

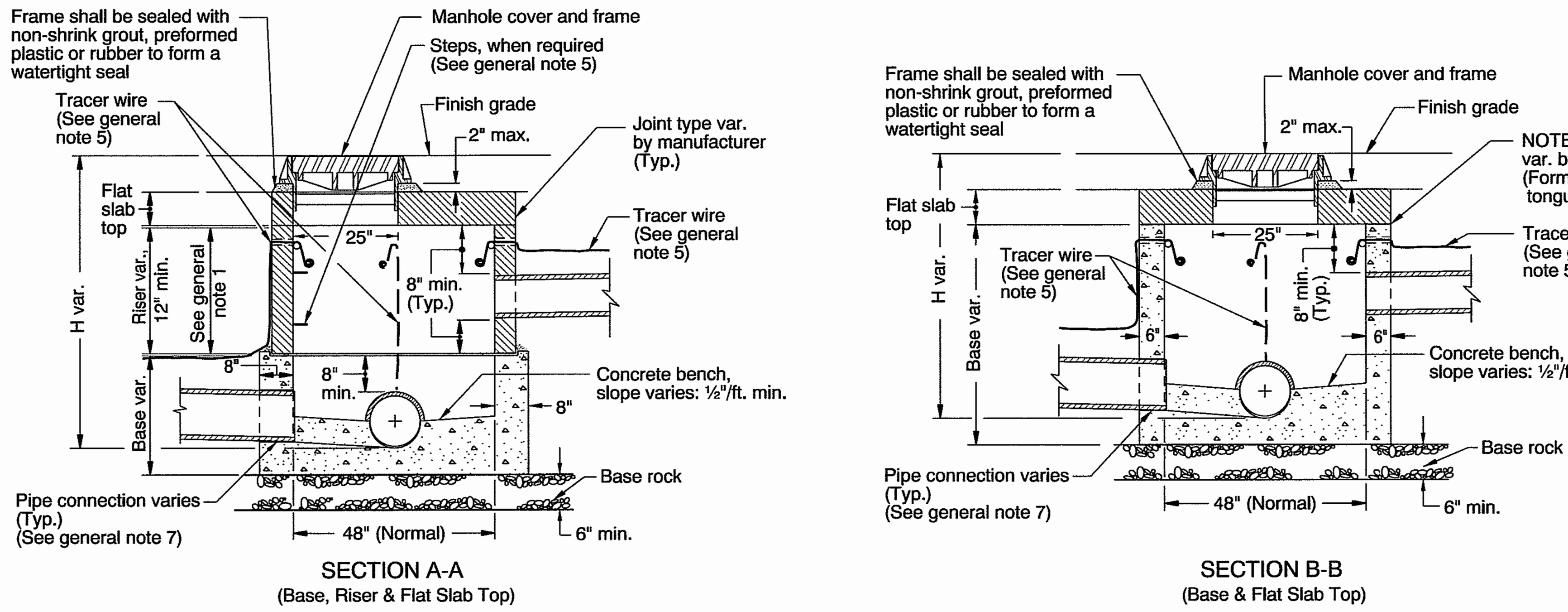

SECTION A-A
(Base, Riser & Flat Slab Top)

SECTION B-B
(Base & Flat Slab Top)

LEGEND
(See general note 3)

Cast-in-Place concrete
Precast concrete
1: 2 cement mortar
Sewer pipe

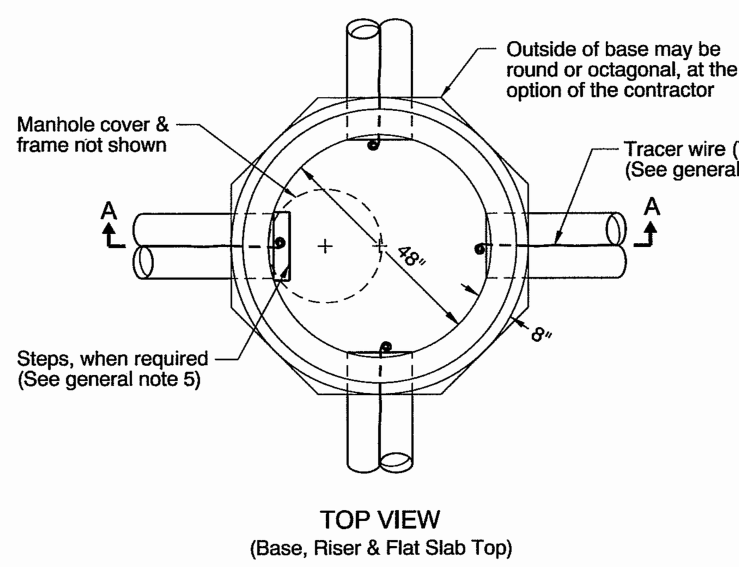

TOP VIEW
(Base, Riser & Flat Slab Top)

NOTES:
Location, elevation, and number of pipe(s) varies.

When H=42" or less make hole for frame in center of cover slab.

When H=42" or less omit steps.

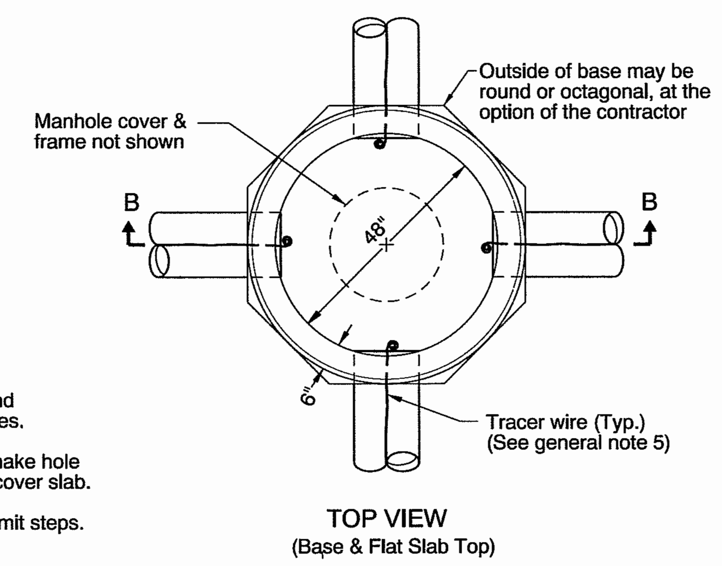

TOP VIEW
(Base & Flat Slab Top)

GENERAL NOTES FOR ALL DETAILS:

1. Minimum length if laterals or connections are inserted: outside diameter of pipe + 17".
2. Use Section B-B when length of riser becomes less than minimum shown.
3. Base may be precast or cast-in-place.
4. All precast products shall conform to the requirements of ASTM C478.
5. See Std. Drg. RD336 for details not shown.
6. See Std. Drg. RD344 for manhole base section.
7. See Std. Drg. RD345 for pipe to manhole connections.
8. See Std. Drg. RD356 for manhole covers and frames.
9. All concrete shall be commercial grade concrete.
10. Max. pipe diameter varies with pipe material.
11. Location, elevation, diameter, slope, and number of pipe(s) varies, see project plans.

CALC. BOOK NO. N/A — BASELINE REPORT DATE 21-JUL-2015

NOTE: All material and workmanship shall be in accordance with the current Oregon Standard Specifications

The selection and use of this Standard Drawing, while designed in accordance with generally accepted engineering principles and practices, is the sole responsibility of the user and should not be used without consulting a Registered Professional Engineer.

OREGON STANDARD DRAWINGS

SHALLOW MANHOLES

2015

DATE	REVISION DESCRIPTION
07-2015	REVISED DETAILS & NOTES

rd342.dgn 21-JUL-2015

Effective Date: June 1, 2016 - November 30, 2016 RD342

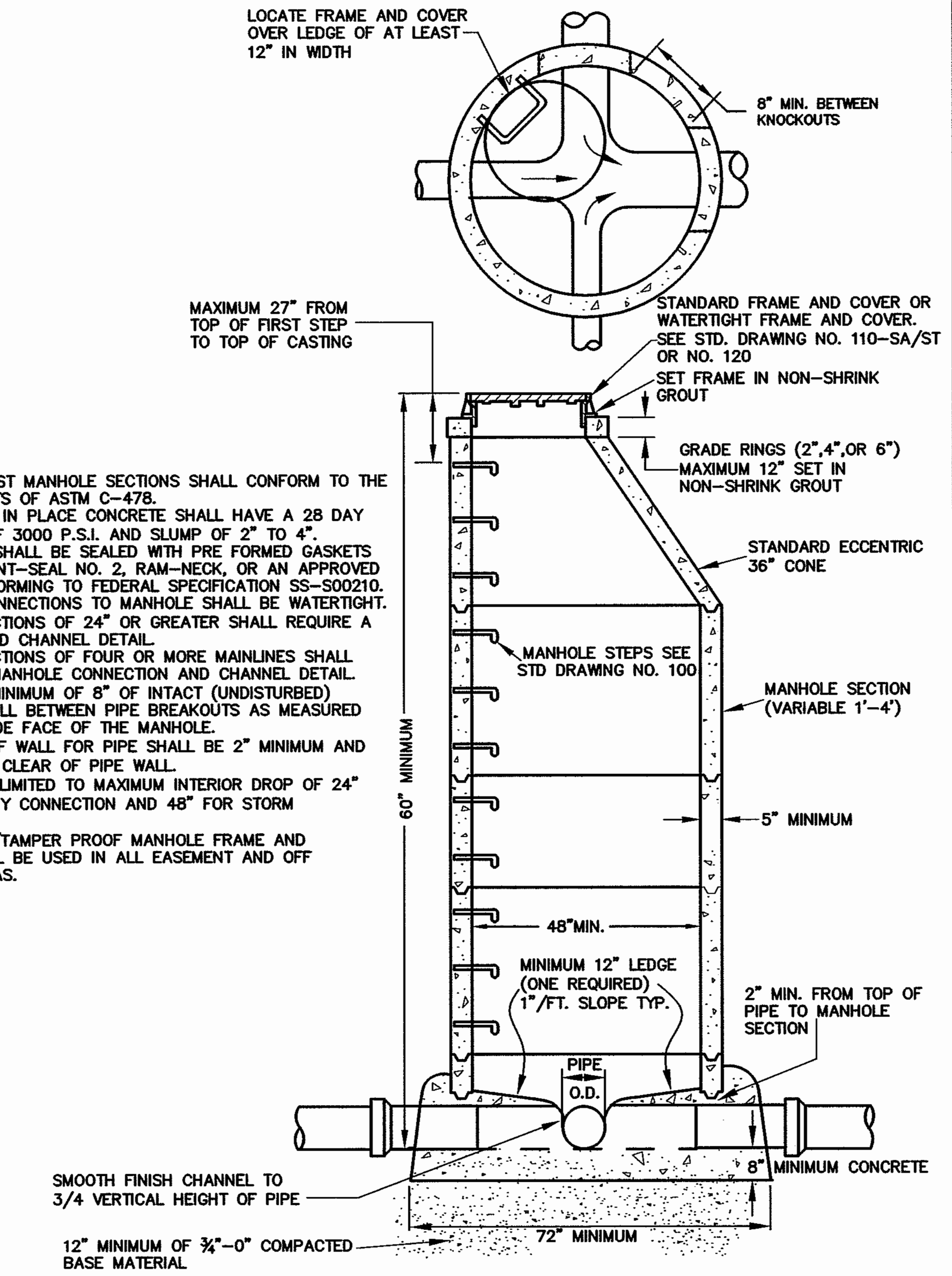

NOTES:

1. ALL PRE-CAST MANHOLE SECTIONS SHALL CONFORM TO THE REQUIREMENTS OF ASTM C-478.
2. ALL POURED IN PLACE CONCRETE SHALL HAVE A 28 DAY STRENGTH OF 3000 P.S.I. AND SLUMP OF 2" TO 4".
3. ALL JOINTS SHALL BE SEALED WITH PRE FORMED GASKETS SUCH AS KENT-SEAL NO. 2, RAM-NECK, OR AN APPROVED EQUAL CONFORMING TO FEDERAL SPECIFICATION SS-S00210.
4. ALL PIPE CONNECTIONS TO MANHOLE SHALL BE WATERTIGHT.
5. PIPE CONNECTIONS OF 24" OR GREATER SHALL REQUIRE A MANHOLE AND CHANNEL DETAIL.
6. PIPE CONNECTIONS OF FOUR OR MORE MAINLINES SHALL REQUIRE A MANHOLE CONNECTION AND CHANNEL DETAIL.
7. PROVIDE A MINIMUM OF 8" OF INTACT (UNDISTURBED) MANHOLE WALL BETWEEN PIPE BREAKOUTS AS MEASURED ON THE INSIDE FACE OF THE MANHOLE.
8. BREAKOUT OF WALL FOR PIPE SHALL BE 2" MINIMUM AND 4" MAXIMUM CLEAR OF PIPE WALL.
9. THIS DETAIL LIMITED TO MAXIMUM INTERIOR DROP OF 24" FOR SANITARY CONNECTION AND 48" FOR STORM CONNECTION.
10. WATERTIGHT/TAMPER PROOF MANHOLE FRAME AND COVER SHALL BE USED IN ALL EASEMENT AND OFF STREET AREAS.

STANDARD MANHOLE
DRAWING NO. 010 — REVISED 02-03
Clean Water Services — Our commitment is clear.

NOTES:
1. ALL JOINTS AND RUBBER GASKETS SHALL CONFORM TO THE REQUIREMENTS OF ASTM C-433.
2. ALL MANHOLE SECTIONS SHALL CONFORM TO THE REQUIREMENTS OF ASTM C-478 AND APPLICABLE PROVISIONS OF STANDARD MANHOLE, DRAWING NO. 010.
3. STEPS REQUIRED ON FLAT TOP MANHOLES DEEPER THAN 48".

RUBBER GASKET FLAT TOP (OPTIONAL)

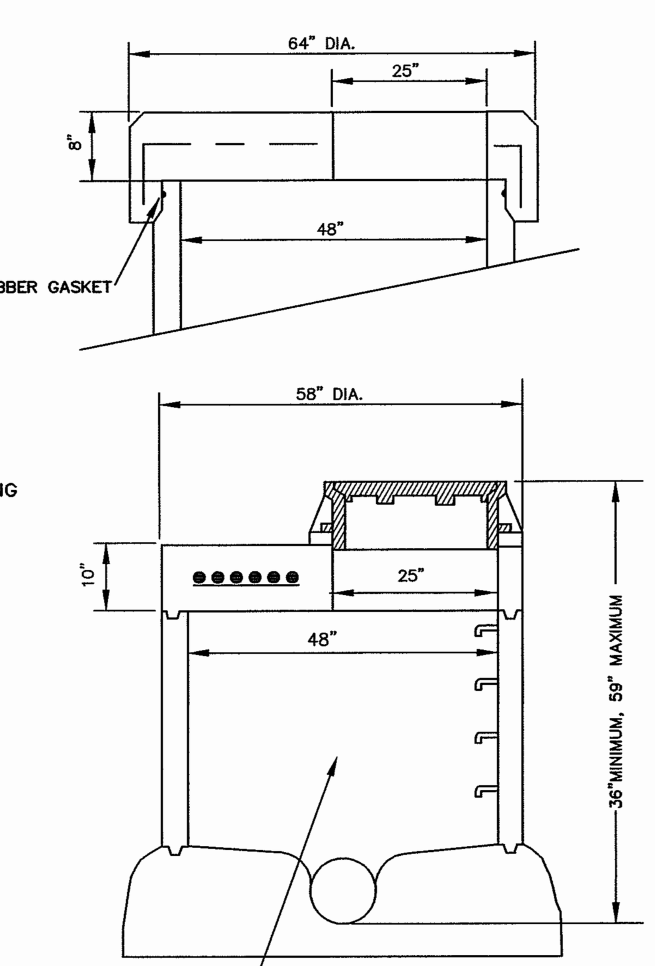

RUBBER GASKET FLAT TOP REINFORCEMENT
OR
STANDARD MANHOLE FLAT TOP REINFORCEMENT

#6 BAR AROUND OUTSIDE OF OPENING
#6 DIAGONALS BOTH SIDES OF OPENING
#6 6" O.C. BOTH WAYS

NOTE: FRAME TO BE PLACED NEAR UPSTREAM PIPE AND NOT IN CENTER OF FLAT TOP.

FLAT TOP MANHOLE
DRAWING NO. 050 — REVISED 02-03
Clean Water Services — Our commitment is clear.

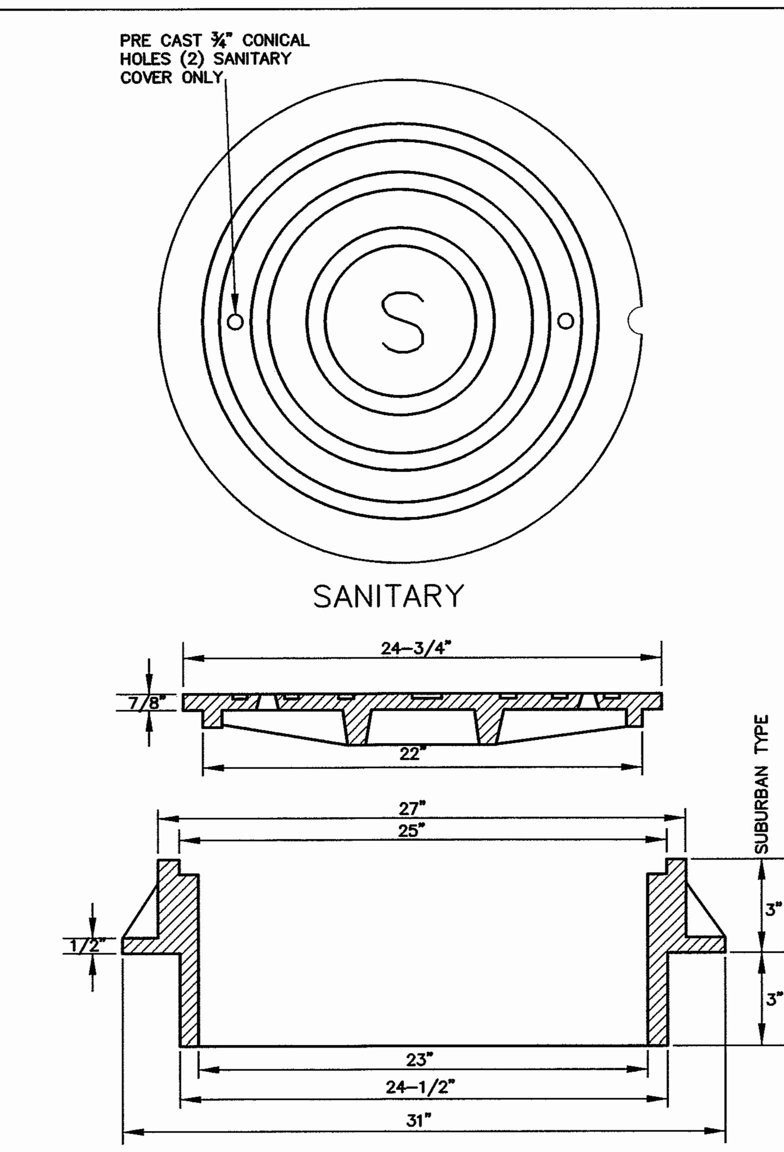

SANITARY

NOTES:
1. SUBURBAN TYPE NOT FOR USE IN TRAFFIC AREAS OF COLLECTOR AND ARTERIAL STREETS
2. COVER AND FRAME SHALL BE GRAY CAST IRON ASTM A-48 CLASS 30.
3. COVER AND FRAME TO BE MACHINED TO A TRUE BEARING ALL AROUND.
4. NOTCH LID FOR LIFTING HOOK.

SUBURBAN AND STANDARD MANHOLE FRAME AND COVER SANITARY
DRAWING NO. 110 — REVISED 12-06
Clean Water Services — Our commitment is clear.

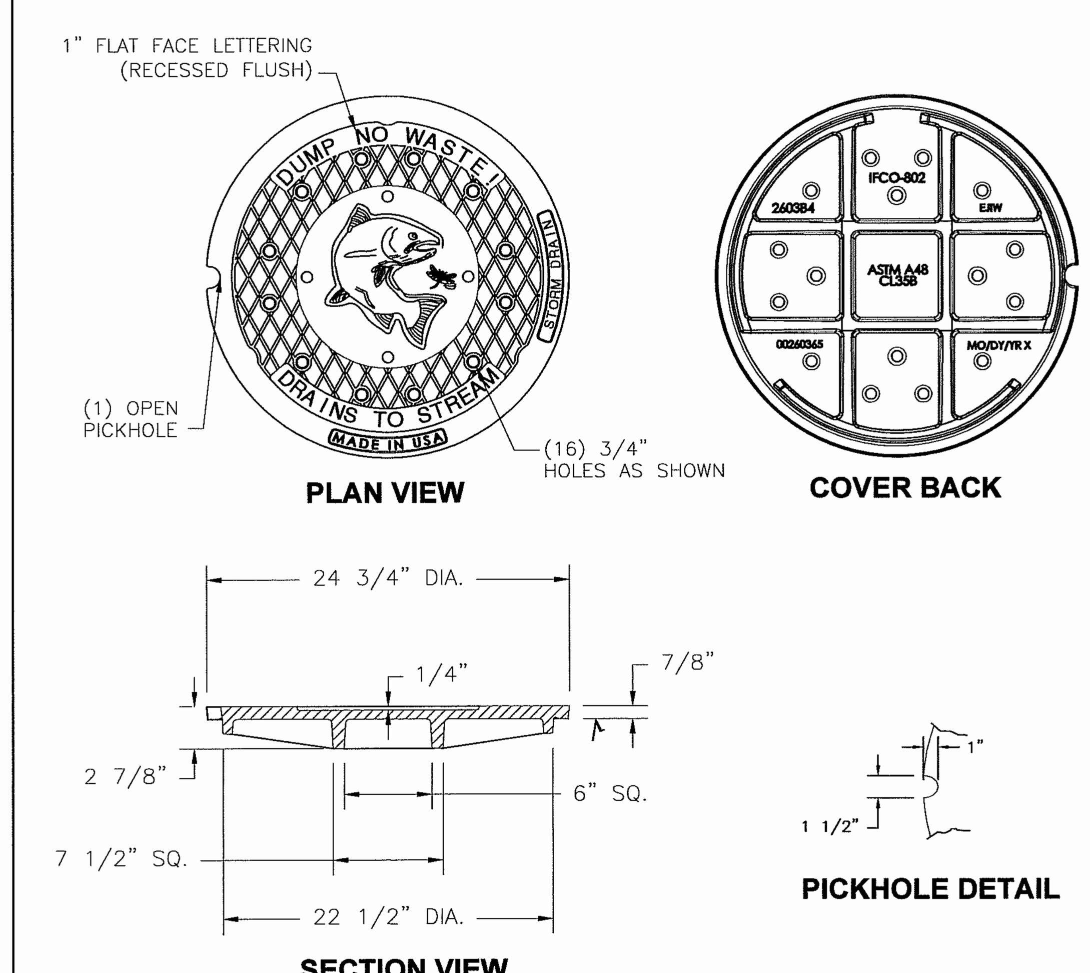

PLAN VIEW

COVER BACK

SECTION VIEW

PICKHOLE DETAIL

SEE DETAIL #110 FOR MANHOLE FRAME SPECIFICATIONS.

STORM WATER MANHOLE LID
DRAWING NO. 120 — REVISED 12-06
Clean Water Services — Our commitment is clear.

REGISTERED PROFESSIONAL ENGINEER #18309PE OREGON JAN. 16, 1996 WILLIAM M. PAVLICH
RENEWS: 12/31/16

BID SET

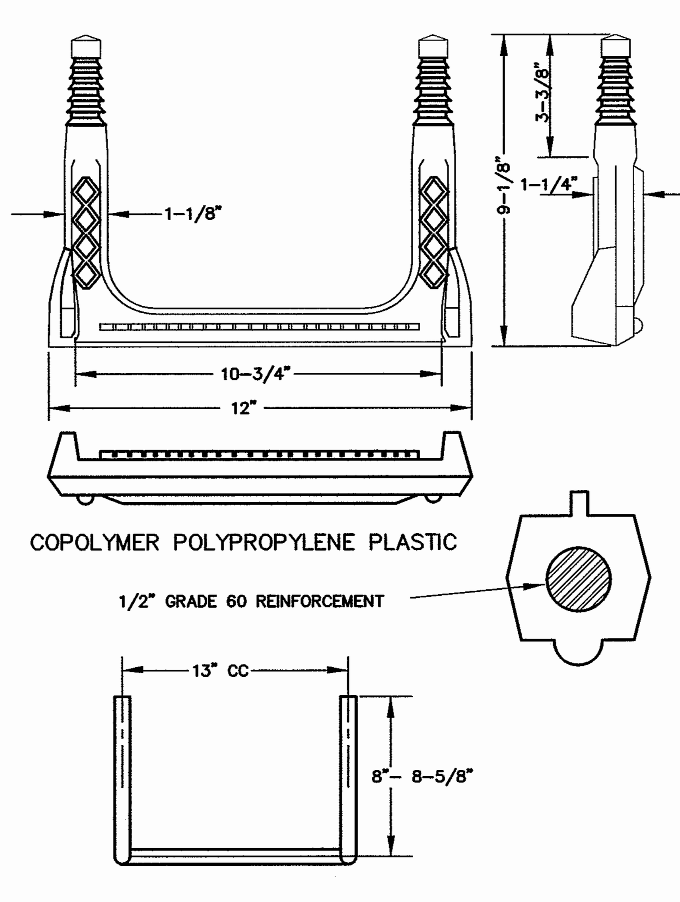

NOTES:

1. ALL STEPS SHALL CONFORM TO THE REQUIREMENTS OF ASTM C-478.
2. MANHOLE STEPS MUST BE TIGHT AND FIRMLY EMBEDDED.
3. ALL STEPS WITHIN A MANHOLE SHALL BE OF THE SAME DESIGN, TYPE, AND SIZE. (MIXING OF UNMATCHED STEPS IS NOT PERMITTED).

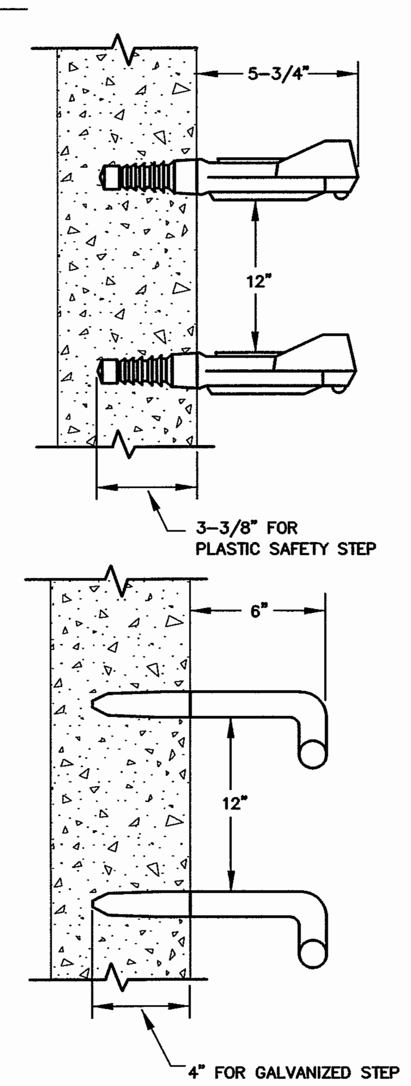

MATERIALS:

GALVANIZED:
#6 (3/4" DIA.) GALVANIZED DEFORMED REINFORCING BAR.
REINFORCING BAR CONFORMING WITH ASTM A-615 GRADE 40.
GALVANIZED CONFORMING WITH ASTM A-123.

PLASTIC:
MUST CONFORM WITH ASTM C-478.
STEEL REINFORCING BAR MINIMUM 1/2" GRADE 60.
MEETING REQUIREMENTS OF ASTM A615 ENCAPSULATED
WITH INJECTION MOLDED COPOLYMER POLYPROPYLENE
WITH SERRATED SURFACES.

MANHOLE STEP
DRAWING NO. 100 — REVISED 02-03
Clean Water Services — Our commitment is clear.

Revisions and Addendums			
Description	Date	No.	By

PACE — An Engineering Services Company
5000 Meadows Road, Suite 345
Lake Oswego, OR 97035
p. 503.597.3222 | f. 503.5975.7655
Civil | Structural | Planning | Survey
paceengrs.com

TIGARD
ENGINEERING DVISION
PUBLIC WORKS DEPARTMENT
13125 S.W. HALL BLVD.
TIGARD, OREGON 97223
VOICE: 503-639-4171
FAX: 503-624-0752
WWW.TIGARD-OR.GOV

DESIGN: WP | DRAWN: MA | CHECK: JS | PROJ. NO: 16819.00 | BID ON:

CANTERBURY LANE STORM SEWER LINE UPGRADE
SW CANTERBURY LANE
MISCELLANEOUS DETAILS

SHEET C7
7 OF 10
FILE NO 94033

Plotted by MARK AAGAARD on Tuesday, August 02, 2016 at 10:50:33 AM from the DETAILS layout tab
File Name: P:\16\16819 - TIGARD - CANTERBURY LANE STORM LINE UPGRADE\CAD\ENGINEERING\SHEETS\P16819DETAILS.DWG

SEE NOTE AT TOP OF STANDARD DETAIL #020. FOR LARGE DIAMETER MANHOLES SEE STANDARD DETAIL #160

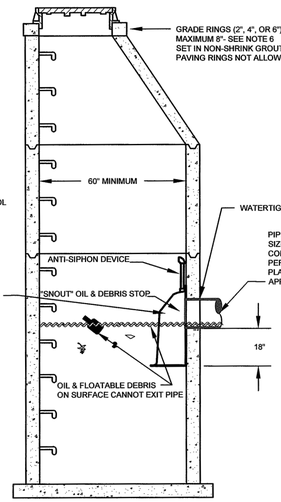

NOTES:
1. ALL MANHOLE SECTIONS SHALL CONFORM TO THE REQUIREMENTS OF ASTM C-478 AND APPLICABLE PROVISIONS OF STD. MANHOLE DRAWING NO. 010
2. INLET AND OUTLET PIPE NOT TO EXCEED 18"DIA.
3. PROVIDE SPECIAL DETAIL FOR OUTLET FLOW CONTROL EXCEEDING 18" DIA.
4. ALL OUTLETS SHALL HAVE FLOW CONTROL DEVICE.

ALL HOODS AND TRAPS FOR CATCH BASINS AND WATER QUALITY STRUCTURES SHALL BE AS MANUFACTURED BY:
BEST MANAGEMENT PRODUCTS, INC.
53 MT. ARCHER RD.
LYME, CT 06371
(860) 434-0277, (860) 434-3195
FAX TOLL FREE: (800) 504-8008
OR (888) 354-7585
WEB SITE: WWW.BESTMP.COM
OR PRE-APPROVED EQUAL

SUMP VOLUME AVAILABLE

MINIMUM	MAXIMUM	
60" M.H.=	58.9 CF	98.1 CF
72" M.H.=	84.8 CF	141.3 CF
84" M.H.=	115.4 CF	192.3 CF

PROVIDE SPECIAL DETAIL FOR VOLUME REQUIREMENTS EXCEEDING 192.3 CF

SUMP VOLUME REQUIREMENTS
20 CFH,0 CFS OF INFLOW

58.9 CF MINIMUM REQUIRED

WATER QUALITY MANHOLE (SNOUT) A

DRAWING NO. 250 REVISED 12-06

CleanWater Services — Our commitment is clear.

CONFIGURATION DETAIL

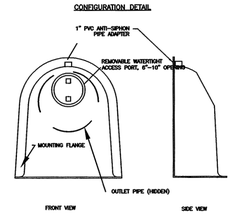

SNOUT OIL-WATER-DEBRIS SEPARATOR

INSTALLATION DETAIL

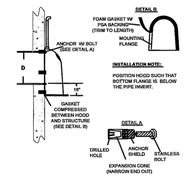

INSTALLATION NOTE:
POSITION HOOD SUCH THAT BOTTOM FLANGE IS BELOW THE PIPE INVERT.

NOTES:
1. ALL HOODS AND TRAPS FOR CATCH BASINS AND WATER QUALITY STRUCTURES SHALL BE AS MANUFACTURED BY:
   BEST MANAGEMENT PRODUCTS, INC.
   53 MT. ARCHER RD.
   LYME, CT 06371
   (860) 434-0277, (860) 434-3195 FAX
   TOLL FREE: (800) 504-8008 OR (888) 354-7585
   WEB SITE: www.bestmp.com
   OR PRE-APPROVED EQUAL
2. ALL HOODS SHALL BE CONSTRUCTED OF A GLASS REINFORCED RESIN COMPOSITE WITH ISO GEL COAT EXTERIOR FINISH WITH A MINIMUM 0.125" LAMINATE THICKNESS.
3. ALL HOODS SHALL BE EQUIPPED WITH A WATERTIGHT ACCESS PORT, A MOUNTING FLANGE, AND AN ANTI-SIPHON VENT AS DRAWN. (SEE CONFIGURATION DETAIL)
4. THE SIZE AND POSITION OF THE HOOD SHALL BE DETERMINED BY OUTLET PIPE SIZE AS PER MANUFACTURER'S RECOMMENDATION.
5. THE BOTTOM OF THE HOOD SHALL EXTEND DOWNWARD A DISTANCE OF 18" FROM I.E. OUT.
6. THE ANTI-SIPHON VENT SHALL EXTEND ABOVE HOOD BY MINIMUM OF 3" AND A MAXIMUM OF 24" ACCORDING TO STRUCTURE CONFIGURATION.
7. THE SURFACE OF THE STRUCTURE WHERE THE HOOD IS MOUNTED SHALL BE FINISHED SMOOTH AND FREE OF LOOSE MATERIAL.
8. THE HOOD SHALL BE SECURELY ATTACHED TO STRUCTURE WALL WITH 3/8" STAINLESS STEEL BOLTS AND OIL-RESISTANT GASKET AS SUPPLIED BY MANUFACTURER. (SEE INSTALLATION DETAIL)
9. INSTALLATION INSTRUCTIONS SHALL BE FURNISHED WITH MANUFACTURER SUPPLIED INSTALLATION KIT.
   INSTALLATION KIT SHALL INCLUDE:
   A. INSTALLATION INSTRUCTIONS
   B. PVC ANTI-SIPHON VENT PIPE AND ADAPTER
   C. OIL-RESISTANT CRUSHED CELL FOAM GASKET WITH PSA BACKING
   D. 3/8" STAINLESS STEEL BOLTS
   E. ANCHOR SHIELDS

WATER QUALITY MANHOLE (SNOUT) B

DRAWING NO. 260 REVISED 12-06

CleanWater Services — Our commitment is clear.

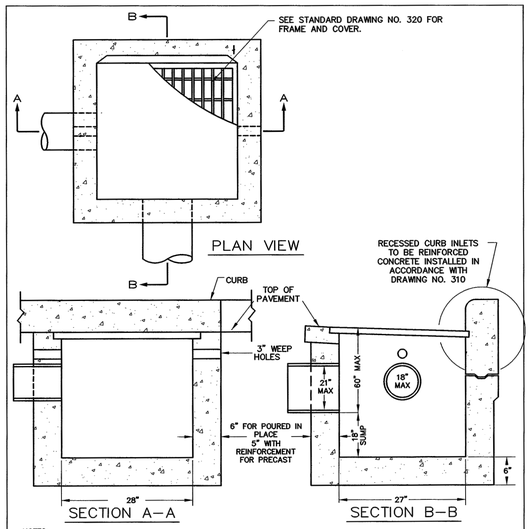

NOTES:
1. CATCH BASIN SHALL BE CONSTRUCTED IN ACCORDANCE WITH ASTM C-478.
2. INSTALL STEPS WHEN DISTANCE FROM TOP OF GRATE TO FLOW LINE OF PIPE IS GREATER THAN 48". SEE STANDARD DRAWING NO. 100. SET FIRST STEP 12" FROM TOP OF GRATE.
3. INSTALL STRUCTURE ON MINIMUM OF 8" OF ¾"-0" COMPACTED BASE MATERIAL.
4. REINFORCEMENT FOR PRE CAST CATCH BASIN SHALL BE REBAR MEETING ASTM A-615 GRADE 60 OR WELDED WIRE MEETING ASTM A-497.
5. ALL POURED INPLACE CONCRETE SHALL HAVE A 28 DAY STRENGTH OF 3000 P.S.I. AND A SLUMP OF 2" TO 4".
6. CHANNEL REQUIRED IN FLOW THROUGH APPLICATIONS, AS APPROVED. ALL OTHER APPLICATIONS REQUIRE AN 18" SUMP BELOW LOWEST PIPE INVERT.
7. FULL CURB EXPOSEURE REQUIRED CANNOT BE LOCATED IN SIDEWALK RAMPS OR RAMP WINGS.

GUTTER & CURB INLET CATCH BASIN (CG-2)

DRAWING NO. 300 REVISED 12-06

CleanWater Services — Our commitment is clear.

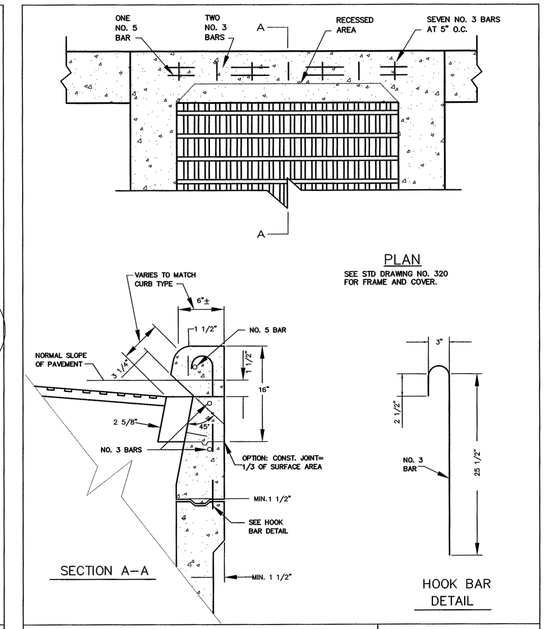

GUTTER & CURB INLET CATCH BASIN (CG-2) REINFORCEMENT

DRAWING NO 310 REVISED 12-06

CleanWater Services — Our commitment is clear.

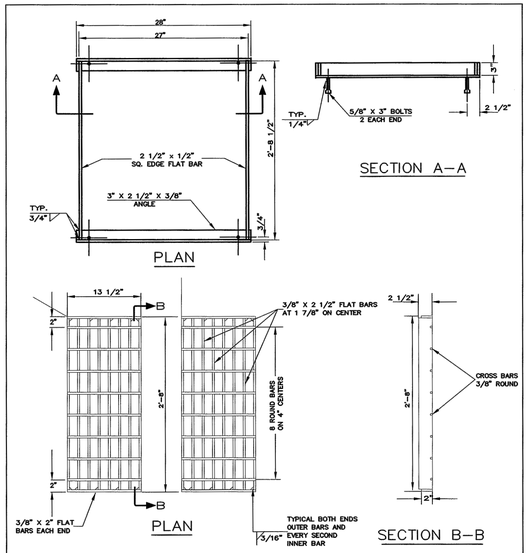

NOTE:
FRAME AND GRATE TO BE NEW STRUCTURAL ASTM A-36 FLAT BAR STEEL OR APPROVED EQUAL. ADDITIONAL THICKNESS AND REINFORCEMENT SHALL BE REQUIRED FOR STATE HIGHWAY APPLICATIONS.

CATCH BASIN FRAME AND GRATE (CG-2)

DRAWING NO. 320 REVISED 02-03

CleanWater Services — Our commitment is clear.

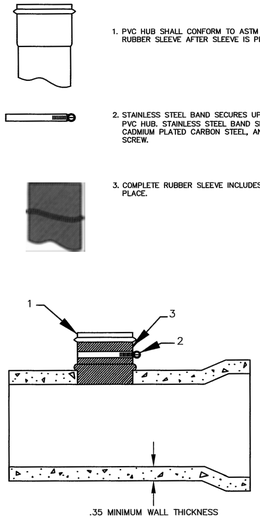

1. PVC HUB SHALL CONFORM TO ASTM 3034, SDR 35 DRIVE INTO CENTER OF RUBBER SLEEVE AFTER SLEEVE IS PLACED IN HOLE.
2. STAINLESS STEEL BAND SECURES UPPER HALF OF RUBBER SLEEVE TO THE PVC HUB. STAINLESS STEEL BAND SHALL BE 300 SERIES, ¾" BAND WIDTH, CADMIUM PLATED CARBON STEEL, AND ATTACHED WITH HEX HEAD SLOTTED SCREW.
3. COMPLETE RUBBER SLEEVE INCLUDES A MOLDED SEGMENT THAT HOLDS IT IN PLACE.

NOTE:
1. ALL INSERTA-TEE HOLES SHALL BE MACHINE DRILLED AND CORED.
2. INSERTA-TEE ARE ALLOWED IN NEWLY CONSTRUCTED SEWER MAINS 12" AND LARGER INSIDE DIAMETER (I.D.).
3. SEWER MAIN SHALL BE TWO SIZES (NOMINAL I.D.) LARGER THAN THE INSERTA-TEE.
4. HOST PIPE SHALL BE MINIMUM .35" WALL THICKNESS.

INSERTA-TEE

DRAWING NO. 530 REVISED 12-06

CleanWater Services — Our commitment is clear.

REGISTERED PROFESSIONAL ENGINEER #18309PE OREGON JAN. 16, 1998 WILLIAM M PAVLICH
RENEWS: 12/31/16

BID SET

Revisions and Addendums			
Description	Date	No.	By

PACE — An Engineering Services Company
5000 Meadows Road, Suite 345
Lake Oswego, OR 97035
p. 503.597.3222 | f. 503.5975.7655
Civil | Structural | Planning | Survey
paceengrs.com

TIGARD
ENGINEERING DVISION
PUBLIC WORKS DEPARTMENT
13125 S.W. HALL BLVD.
TIGARD, OREGON 97223
VOICE: 503-639-4171
FAX: 503-624-0752
WWW.TIGARD-OR.GOV

DESIGN: WP | DRAWN: MA | CHECK: JS | PROJ. NO: 16819.00 | BID ON:

CANTERBURY LANE STORM SEWER LINE UPGRADE
SW CANTERBURY LANE
MISCELLANEOUS DETAILS

SHEET C8
8 OF 10
FILE NO 94033

Plotted by/date: ASLAND on Tuesday, August 02, 2016 at 10:55:04 AM from the DETAILS 1 layout tab
File Name/path: P:\16-16819 - TIGARD - CANTERBURY LANE STORM LINE UPGRADE\DWG\CD\DRAFTED\PV16819DETAILS.DWG

FOR ALL EXCEPT STA 10+00 TO STA 10+20.

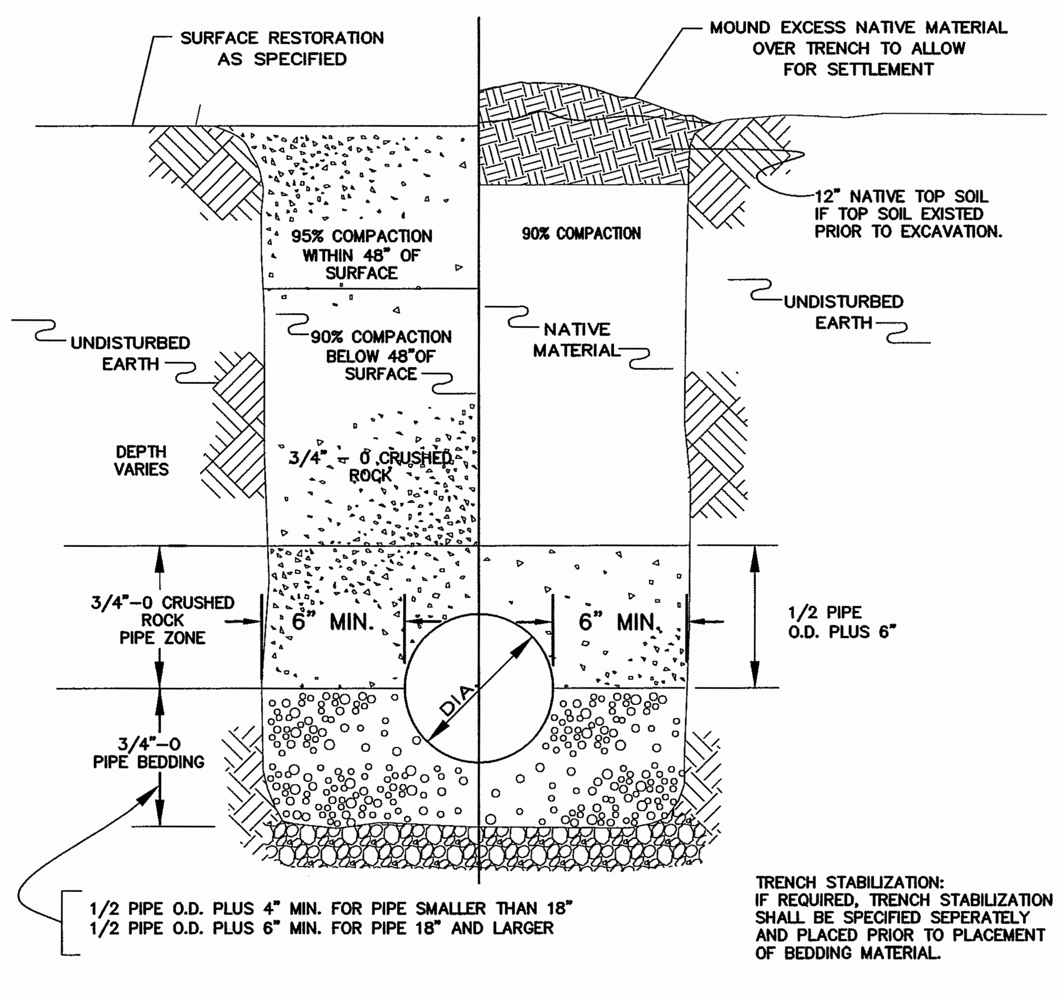

NOTE:
ALL COMPACTTION REQUIREMENTS PER AASHTO T-99 AND ODOT/APWA SPEC 00405.

TRENCH BACKFILL DETAILS

CleanWater Services — Our commitment is clear.

DRAWING NO. 590 REVISED 12-06

FOR TRENCH STA 10+00 TO STA 10+20

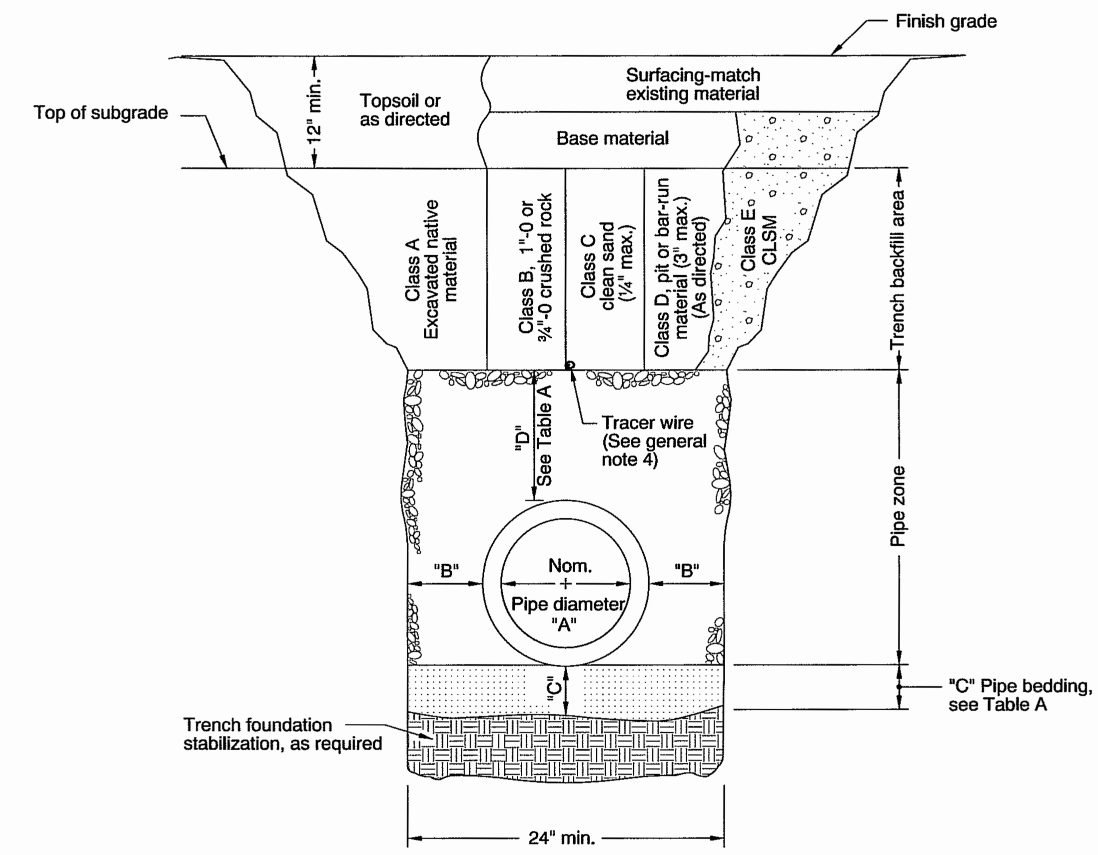

TABLE A

"A" (in)	"B" (in)	"C" (in)	"D" (in)
4	10	4	8
6	10	4	8
8	10	6	10
10	10	6	10
12	12	6	10
15	12	6	10
18	16	6	12
21	16	6	12
24	18	6	12
30	18	6	12
36	24	6	14
42	24	6	14
48	24	6	14
54	24	6	14
60	24	6	14
66	24	6	14
72	24	6	14

For pipes over 72" diameter, see general note 3.

MULTIPLE INSTALLATIONS

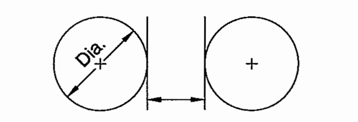

DIAMETER	MIN. SPACE BETWEEN PIPES
Up to 48"	24"
48" to 72"	One half (½) dia. of pipe

GENERAL NOTES FOR ALL DETAILS:

1. Surfacing of paved areas shall comply with street cut Std. Drg. RD302.
2. For pipe installation in embankment areas where the trench method will not be used and the pipe is ≥ 36" diameter, increase dimension "B" to nominal pipe diameter.
3. Pipes over 72" diameter are structures, and are not applicable to this drawing.
4. See Std. Drg. RD336 for tracer wire details (When required).

CALC. BOOK NO. N/A — BASELINE REPORT DATE 14-JUL-2014

NOTE: All material and workmanship shall be in accordance with the current Oregon Standard Specifications

The selection and use of this Standard Drawing, while designed in accordance with generally accepted engineering principles and practices, is the sole responsibility of the user and should not be used without consulting a Registered Professional Engineer.

OREGON STANDARD DRAWINGS

TRENCH BACKFILL, BEDDING, PIPE ZONE AND MULTIPLE INSTALLATIONS

2015

DATE	REVISION DESCRIPTION

rd300.dgn 14-JUL-2014

RD300

Effective Date: June 1, 2016 - November 30, 2016 RD300

FOR T-CUT INFORMATION ONLY.

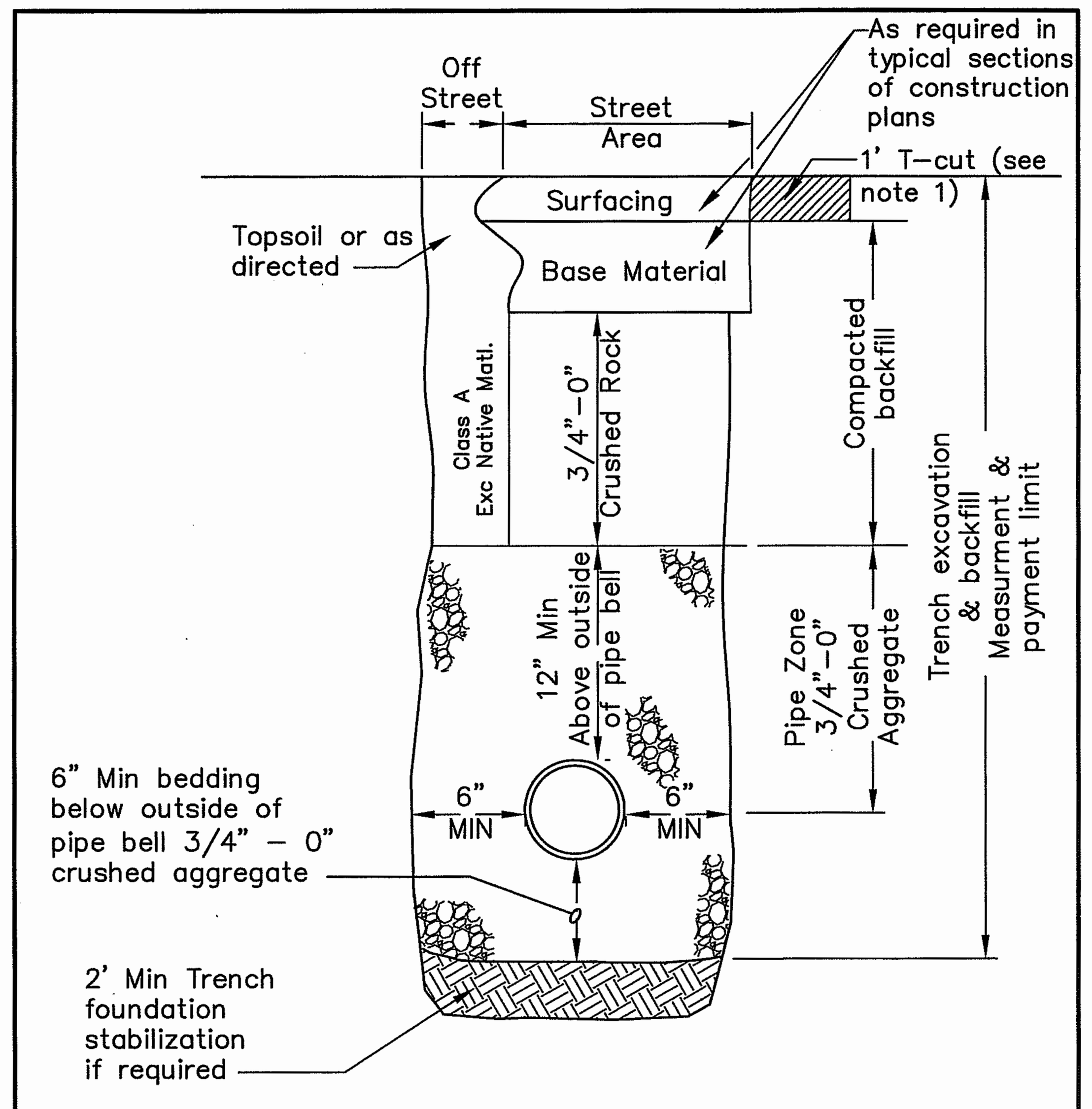

NOTE:
1. 1' T-CUT FOR PIPE ONLY PROJECTS.
2. JOINTS TO BE TACK AND SANDED.
3. SAWCUT SHALL BE TACK COATED WITH BITUMINUS ASPHALT EMULSION.
4. REQUIRED ASPHALT DEPTH TO MATCH EXISTING OR 6", WHICHEVER IS GREATER.

CITY OF TIGARD OREGON ENGINEERING DIVISION PUBLIC WORKS DEPARTMENT 13125 S.W. HALL BLVD. TIGARD, OREGON 97223 VOICE: (503) 639-4171 FAX: (503) 684-7297

APPROVED BY: MICHAEL A. STONE, P.E. CITY ENGINEER JANUARY 2013 APPROVAL DATE

TRENCH BACKFILL

NO SCALE DWG. NO. 180

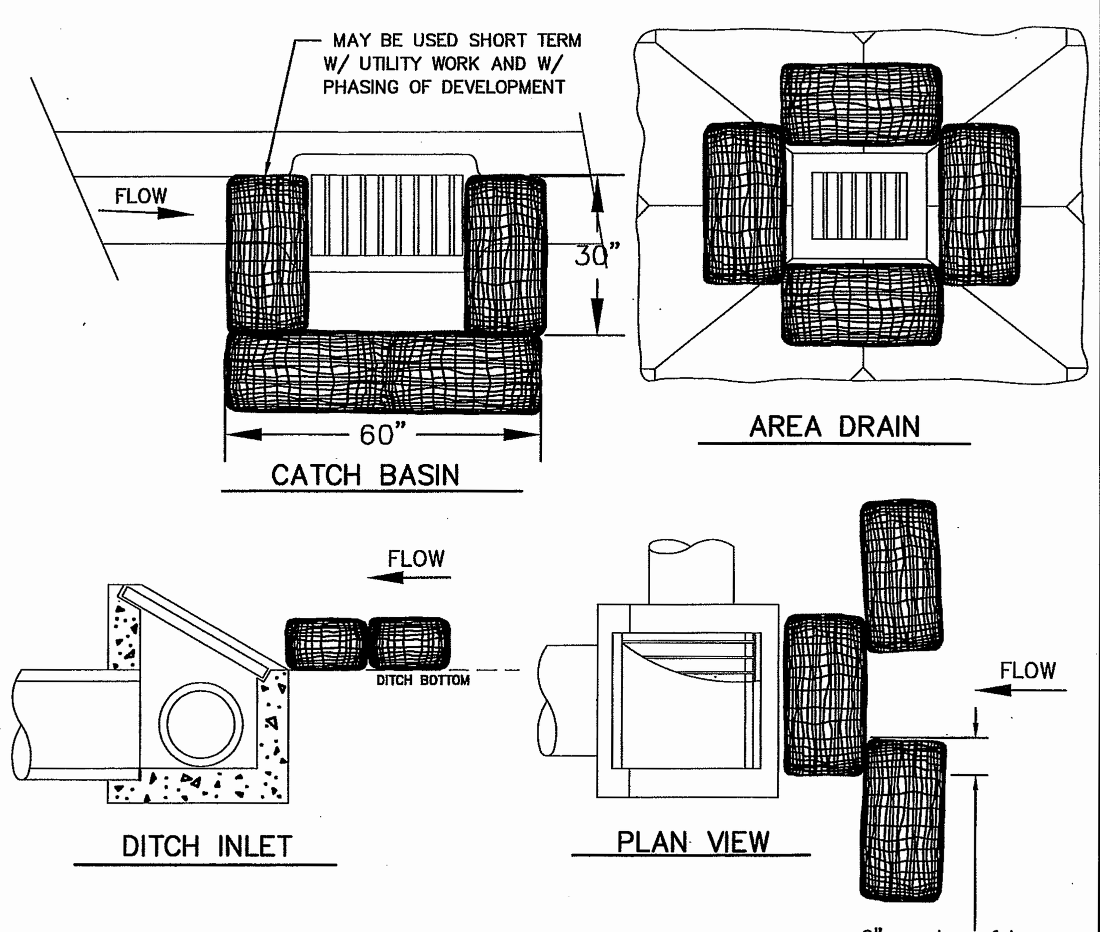

NOTES:
1. ADDITIONAL MEASURES MUST BE CONSIDERED DEPENDING ON SOIL TYPES.
2. BIO-FILTER BAGS SHOULD BE STAKED WHERE APPLICABLE USING (2) 1"x2"WOODEN STAKES OR APPROVED EQUAL PER BAG.
3. WHEN USING 30" BIO-BAGS TO PROTECT A CATCH BASIN YOU MUST HAVE 4 BAGS AND THEY SHALL BE OVERLAPPED BY 6".

FOR FURTHER INFORMATION ON DESIGN CRITERIA SEE CHAPTER 4 OF CLEAN WATER SERVICES EROSION PREVENTION AND SEDIMENT CONTROL PLANNING AND DESIGN MANUAL.

INLET PROTECTION TYPE 4

CleanWater Services — Our commitment is clear.

DRAWING NO. 915 REVISED 12-06

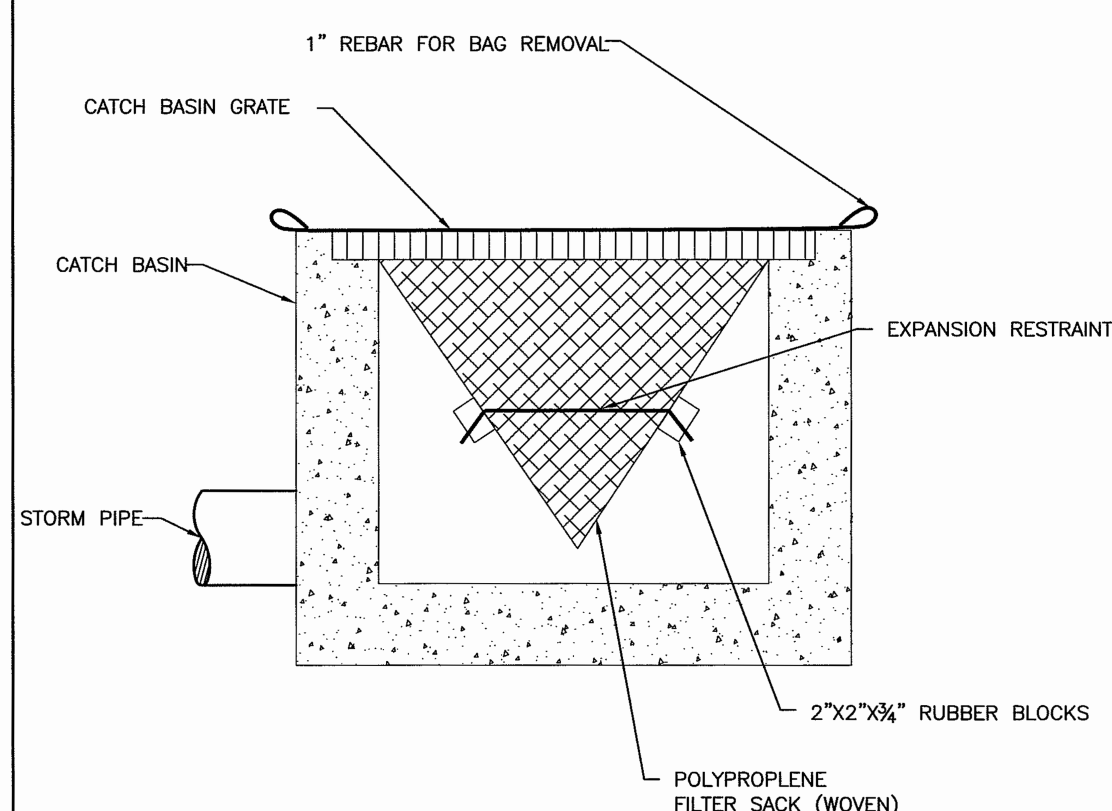

WOVEN POLYPROPLENE SACK

NOTE:
1. RECESSED CURB INLET CATCH BASINS MUST BE BLOCKED WHEN USING FILTER FABRIC INLET SACKS. SIZE OF FILTER FABRIC INLET SACKS TO BE DETERMINED BY MANUFACTURER.

FOR FURTHER INFORMATION ON DESIGN CRITERIA SEE CHAPTER 4 OF CLEAN WATER SERVICES EROSION PREVENTION AND SEDIMENT CONTROL PLANNING AND DESIGN MANUAL.

INLET PROTECTION TYPE 5

CleanWater Services — Our commitment is clear.

DRAWING NO. 920 REVISED 12-06

NOTES:

1. WHEN RAINFALL AND RUNOFF OCCURS DAILY INSPECTIONS OF THE EROSION AND SEDIMENT CONTROLS AND DISCHARGE OUTFALLS MUST BE PROVIDED BY SOME ONE KNOWLEDGEABLE AND EXPERIENCED IN THE PRINCIPLES, PRACTICES, INSTALLATION, AND MAINTENANCE OF EROSION AND SEDIMENT CONTROLS WHO WORKS FOR THE PERMITTEE.
2. CONSTRUCTION ACTIVITIES MUST AVOID OR MINIMIZE EXCAVATION AND CREATION OF BARE GROUND FROM OCTOBER 1 THROUGH MAY 31 EACH YEAR.
3. DURING WET WEATHER PERIOD, TEMPORARY STABILIZATION OF THE SITE MUST OCCUR AT THE END OF EACH WORK DAY.
4. SEDIMENT CONTROLS MUST BE INSTALLED AND MAINTAINED ON ALL DOWN GRADIENT SIDES OF THE CONSTRUCTION SITE AT ALL TIMES DURING CONSTRUCTION. THEY MUST REMAIN IN PLACE UNTIL PERMANENT VEGETATION OR OTHER PERMANENT COVERING OF EXPOSED SOIL IS ESTABLISHED.
5. ALL ACTIVE INLETS MUST HAVE SEDIMENT CONTROLS INSTALLED AND MAINTAINED AT ALL TIMES DURING CONSTRUCTION. UNLESS OTHERWISE APPROVED, A SURFACE MOUNTED AND ATTACHABLE, U-SHAPED FILTER BAG IS REQUIRED FOR ALL CURB INLET CATCH BASINS.
6. SIGNIFICANT AMOUNTS OF SEDIMENT WHICH LEAVES THE SITE MUST BE CLEANED UP WITHIN 24 HOURS AND PLACED BACK ON THE SITE AND STABILIZED OR PROPERLY DISPOSED. THE CAUSE OF THE SEDIMENT RELEASE MUST BE FOUND AND PREVENTED FROM CAUSING A RECURRENCE OF THE DISCHARGE WITHIN THE SAME 24 HOURS. ANY IN-STREAM CLEAN UP OF SEDIMENT SHALL BE PREFORMED ACCORDING TO THE OREGON DEPARTMENT OF STATE LANDS REQUIRED TIME FRAME.
7. SEDIMENT MUST NOT BE INTENTIONALLY WASHED INTO STORM SEWERS, DRAINAGE WAYS, OR WATER BODIES.
8. SEDIMENT MUST BE REMOVED FROM BEHIND ALL SEDIMENT CONTROL MEASURES WHEN IT HAS REACHED A HEIGHT OF 1/3RD THE BARRIER HEIGHT, AND PRIOR TO THE CONTROL MEASURES REMOVAL.
9. CLEANING OF ALL STRUCTURES WITH SUMPS MUST OCCUR WHEN THE SEDIMENT RETENTION CAPACITY HAS BEEN REDUCED BY 50% AND AT COMPLETION OF PROJECT.
10. ANY USE OF TOXIC OR OTHER HAZARDOUS MATERIALS MUST INCLUDE PROPER STORAGE, APPLICATION, AND DISPOSAL.
11. THE PERMITTEE MUST PROPERLY MANAGE HAZARDOUS WASTES, USED OILS, CONTAMINATED SOILS, CONCRETE WASTE, SANITARY WASTE, LIQUID WASTE, OR OTHER TOXIC SUBSTANCES DISCOVERED OR GENERATED DURING CONSTRUCTION.
12. THE APPLICATION RATE OF FERTILIZERS USED TO REESTABLISH VEGETATION MUST FOLLOW MANUFACTURER'S RECOMMENDATIONS. NUTRIENT RELEASES FROM FERTILIZERS TO SURFACE WATERS MUST BE MINIMIZED. TIME RELEASE FERTILIZERS SHOULD BE USED AND CARE SHOULD BE MADE IN APPLICATION OF FERTILIZERS WITHIN ANY WATER WAY RIPARIAN ZONE.
13. OWNER OR DESIGNATED PERSON SHALL BE RESPONSIBLE FOR PROPER INSTALLATION AND MAINTENANCE OF ALL EROSION AND SEDIMENT CONTROL MEASURES, IN ACCORDANCE WITH CURRENT CLEAN WATER SERVICES STANDARDS AND STATE, AND FEDERAL REGULATIONS.
14. PRIOR TO ANY LAND DISTURBING ACTIVITIES, THE BOUNDARIES OF THE CLEARING LIMITS, VEGETATED BUFFERS, AND ANY SENSITIVE AREAS SHOWN ON THIS PLAN SHALL BE CLEARLY DELINEATED IN THE FIELD. UNLESS OTHERWISE APPROVED, NO DISTURBANCE IS PERMITTED BEYOND THE CLEARING LIMITS. THE OWNER/PERMITTEE MUST MAINTAIN THE DELINEATION FOR THE DURATION OF THE PROJECT.
NOTE: VEGETATED CORRIDORS TO BE DELINEATED WITH ORANGE CONSTRUCTION FENCE OR APPROVED EQUAL.
15. PRIOR TO ANY LAND DISTURBING ACTIVITIES, THE BMPS THAT MUST BE INSTALLED ARE GRAVEL CONSTRUCTION ENTRANCE, PERIMETER SEDIMENT CONTROL, AND INLET PROTECTION. THESE BMPS MUST BE MAINTAINED FOR THE DURATION OF THE PROJECT.
16. IF VEGETATIVE SEED MIXES ARE SPECIFIED, SEEDING MUST TAKE PLACE NO LATER THAN SEPTEMBER 1ST; THE TYPE AND PERCENTAGES OF SEED IN THE MIX ARE AS IDENTIFIED ON THE PLANS OR AS SPECIFIED BY THE DESIGN ENGINEER.
17. WATER-TIGHT TRUCKS MUST BE USED TO TRANSPORT SATURATED SOILS FROM THE CONSTRUCTION SITE. AN APPROVED EQUIVALENT IS TO DRAIN THE SOIL ON SITE AT A DESIGNATED LOCATION USING APPROPRIATE BMPS; SOIL MUST BE DRAINED SUFFICIENTLY FOR MINIMAL SPILLAGE.
18. ALL PUMPING OF SEDIMENT LADEN WATER MUST BE DISCHARGED OVER AN UNDISTURBED, PREFERABLY VEGETATED AREA, AND THROUGH A SEDIMENT CONTROL BMP (I.E. FILTER BAG).
19. THE ESC PLAN MUST BE KEPT ONSITE. ALL MEASURES SHOWN ON THE PLAN MUST BE INSTALLED PROPERLY TO ENSURE THAT SEDIMENT LADEN WATER DOES NOT ENTER A SURFACE WATER SYSTEM, ROADWAY, OR OTHER PROPERTIES.
20. THE ESC MEASURES SHOWN ON THIS PLAN ARE THE MINIMUM REQUIREMENTS FOR ANTICIPATED SITE CONDITIONS. DURING THE CONSTRUCTION PERIOD,THESE MEASURES SHALL BE UPGRADED AS NEEDED TO MAINTAIN COMPLIANCE WITH ALL REGULATIONS.
21. WRITTEN ESC LOGS ARE SUGGESTED TO BE MAINTAINED ONSITE AND AVAILABLE TO DISTRICT INSPECTORS UPON REQUEST.
22. IN AREAS SUBJECT TO WIND EROSION, APPROPRIATE BMPS MUST BE USED WHICH MAY INCLUDE THE APPLICATION OF FINE WATER SPRAYING, PLASTIC SHEETING, MULCHING, OR OTHER APPROVED MEASURES.
23. ALL EXPOSED SOILS MUST BE COVERED DURING WET WEATHER PERIOD.

STANDARD EROSION CONTROL NOTES FOR SITES LESS THAN 1 ACRE

CleanWater Services — Our commitment is clear.

DRAWING NO. 945 REVISED 12-06

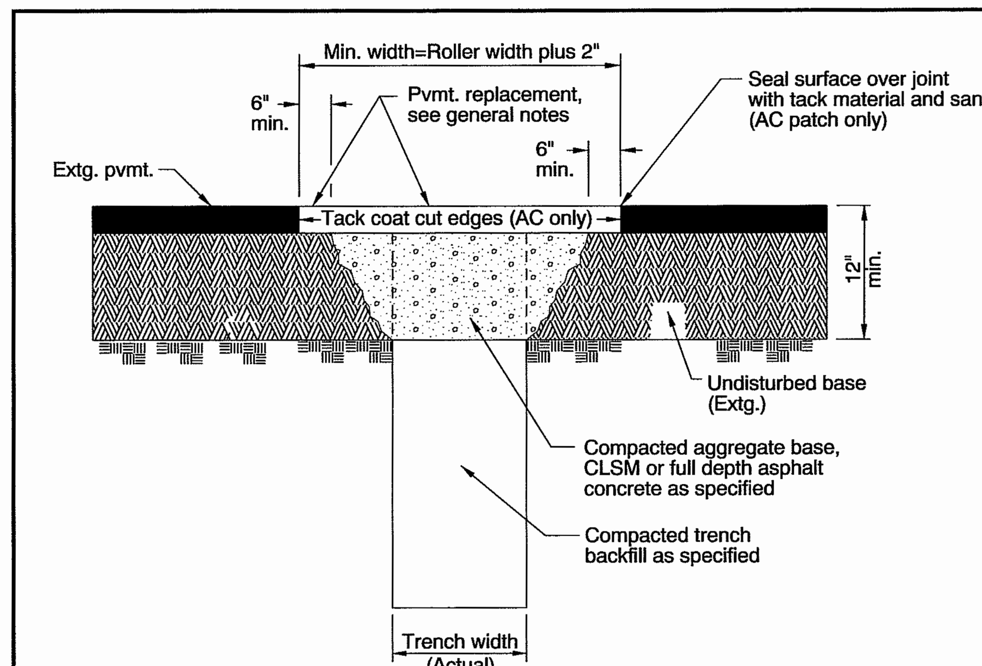

GENERAL NOTES FOR ALL DETAILS:

1. All existing AC or PCC pavement shall be sawcut prior to repaving.
2. Concrete pavement shall be replaced with concrete to a minimum thickness of 6" or to the thickness of removed pavement, whichever is greater.
3. Place AC mix minimum thkn. of 4" or the thkn. of the removed pavement, whichever is greater. Compact as specified.

OREGON STANDARD DRAWINGS

STREET CUT

2015

DATE	REVISION DESCRIPTION

RD302

REGISTERED PROFESSIONAL ENGINEER 18309PE OREGON JAN 16, 1996 WILLIAM M PAVLICH

RENEWS: 12/31/16

BID SET

Revisions and Addendums			
Description	Date	No.	By

PACE — An Engineering Services Company. 5000 Meadows Road, Suite 345 Lake Oswego, OR 97035 p. 503.597.3222 | f. 503.5975.7655 Civil | Structural | Planning | Survey paceengrs.com

ENGINEERING DVISION PUBLIC WORKS DEPARTMENT 13125 S.W. HALL BLVD. TIGARD, OREGON 97223 VOICE: 503-639-4171 FAX: 503-624-0752 WWW.TIGARD-OR.GOV

DESIGN: WP | DRAWN: MA | CHECK: JS | PROJ. NO: 16819.00 | BID ON:

CANTERBURY LANE STORM SEWER LINE UPGRADE

SW CANTERBURY LANE MISCELLANEOUS DETAILS

SHEET C9

9 OF 10

FILE NO 94033

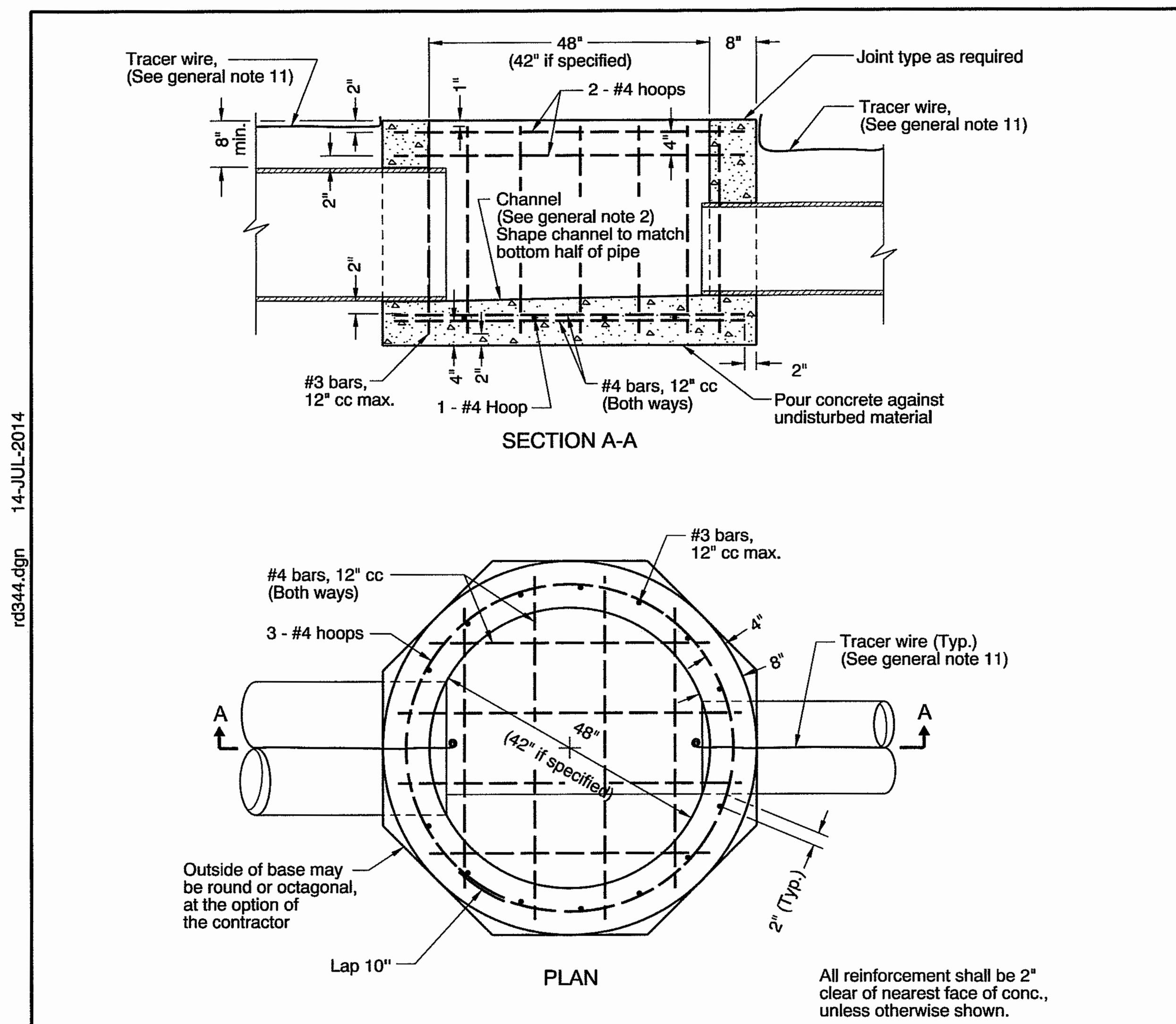

CAST IN PLACE MANHOLE BASE
(For invert channel details, see precast option at right)

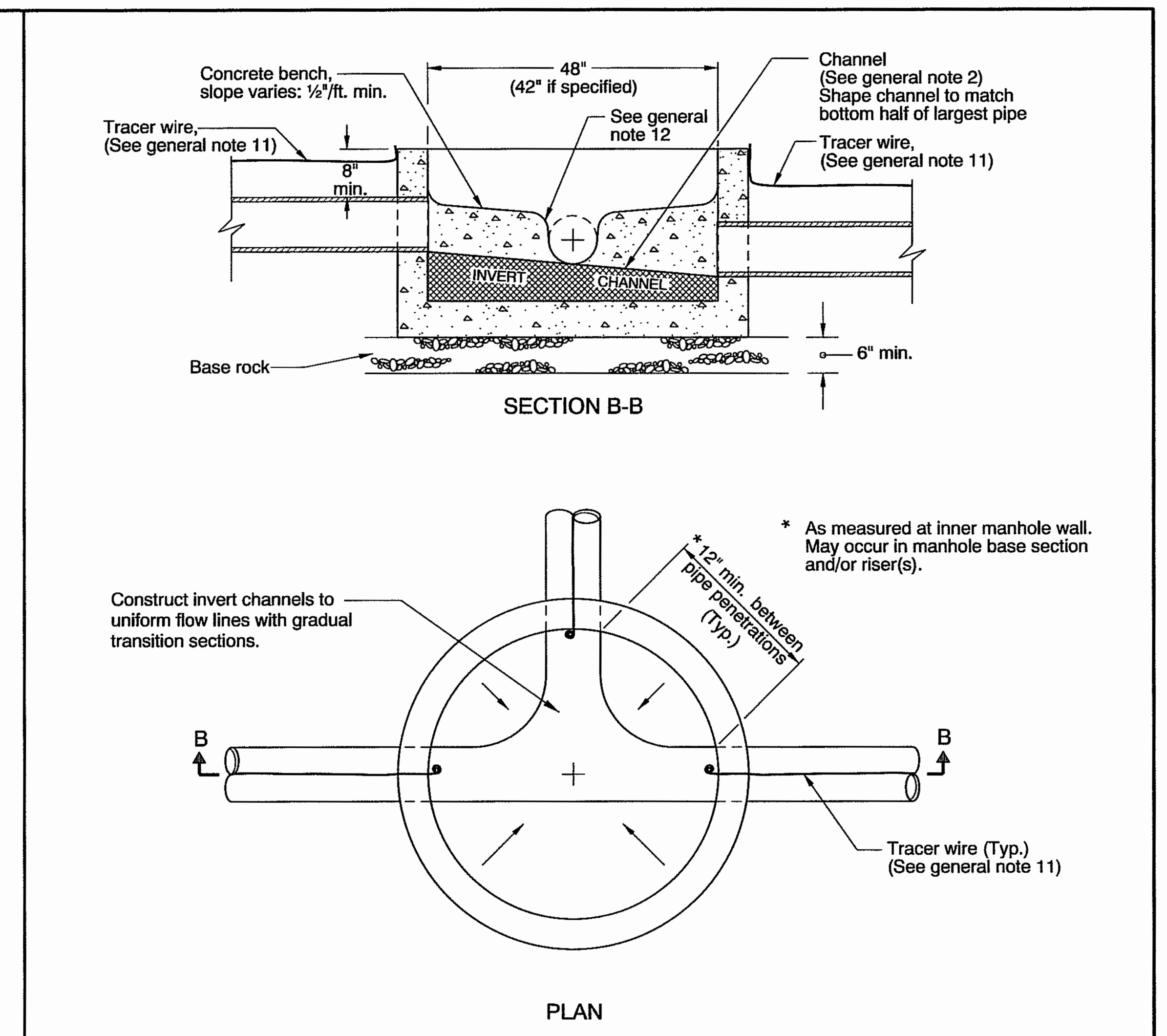

PRECAST MANHOLE BASE

GENERAL NOTES FOR ALL DETAILS:

1. All concrete shall be commercial grade concrete.
2. Channels shall be constructed to provide smooth slopes and radii to outlet pipe.
3. Bases may be precast or cast in place.
4. Max. pipe diameter varies with pipe material.
5. Use on 42" and 48" diameter manhole.
6. Extend pipe into manhole and grout smooth. Pipe(s) may extend 2" max. beyond the interior manhole wall.
7. Location, elevation, diameter, slope, and number of pipe(s) varies, see project plans.
8. All precast products shall conform to the requirements of ASTM C478.
9. See Std. Drg. RD345 for pipe to manhole connections.
10. See Std. Drg. RD336 for manhole steps details.
11. See Std. Drg. RD336 for tracer wire details.
12. At spring line of pipe, extend channel up to crown line on 12:1 batter.

CALC. BOOK NO. N/A — BASELINE REPORT DATE 14-JUL-2014

NOTE: All material and workmanship shall be in accordance with the current Oregon Standard Specifications

The selection and use of this Standard Drawing, while designed in accordance with generally accepted engineering principles and practices, is the sole responsibility of the user and should not be used without consulting a Registered Professional Engineer.

OREGON STANDARD DRAWINGS

STANDARD MANHOLE BASE SECTION

2015

DATE	REVISION DESCRIPTION

Effective Date: June 1, 2016 - November 30, 2016 RD344

rd344.dgn 14-JUL-2014

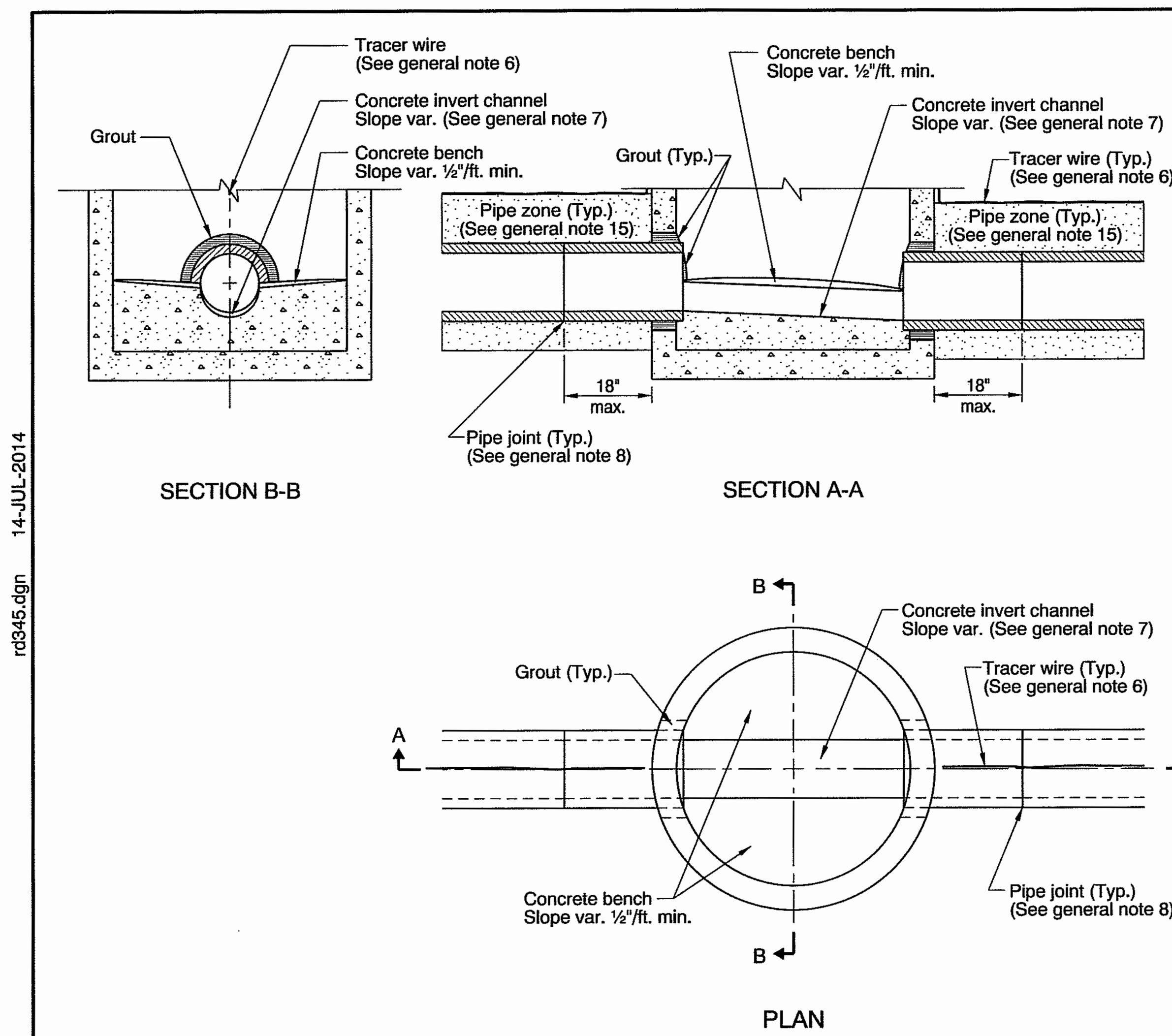

CONNECTION OF RIGID PIPE TO MANHOLE

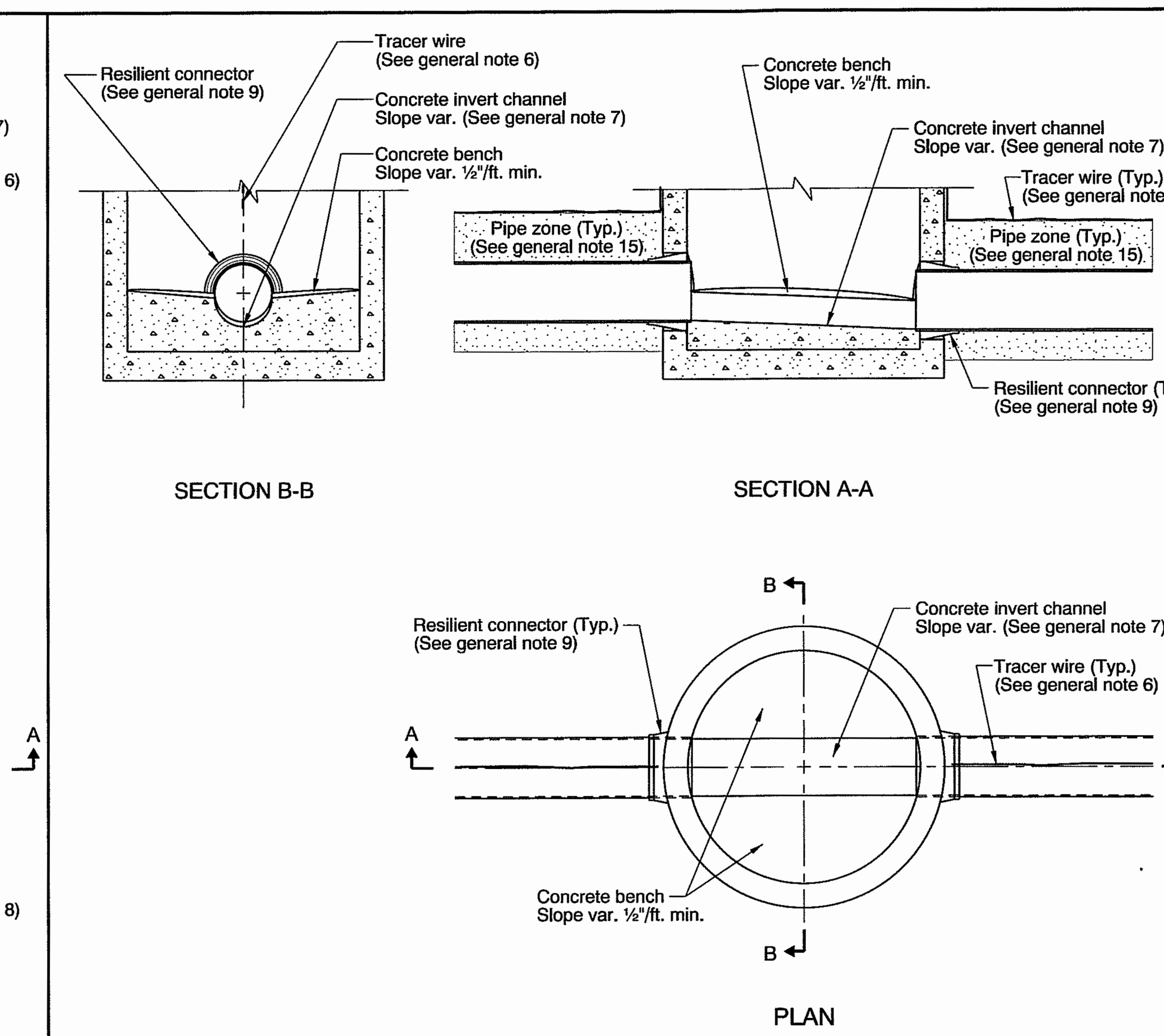

CONNECTION OF FLEXIBLE PIPE TO MANHOLE

GENERAL NOTES FOR ALL DETAILS:

1. All precast sections shall conform to requirements of ASTM C478.
2. Manhole base sections may be precast or cast-in-place.
3. All concrete shall be commercial grade concrete.
4. Location, elevation, diameter, slope, and number of pipe(s) varies, see project plans.
5. Max. pipe diameter varies with pipe material.
6. All connecting pipes shall have a tracer wire, or approved alternate. See Std. Drg. RD336 for tracer wire details.
7. Invert channels shall be constructed to provide smooth slopes and radii to outlet pipe.
8. When rigid pipe is used, the connecting pipe shall have a flexible, gasketted and unrestrained joint within 18" of manhole wall. Joint type varies with manufacturer.
9. When flexible pipe is used, install resilient connectors conforming to requirements of ASTM C923.
10. See Std. Drgs. RD335, RD336, and RD338 for details not shown.
11. See Std. Drg. RD336 for manhole steps details.
12. See Std. Drg. RD342 for shallow manholes.
13. See Std. Drg. RD344 for manhole base section.
14. See Std. Drg. RD356 for manhole covers and frames, manhole adjustment rings, etc.
15. Pipe zone varies, see Std. Drg. RD300.

CALC. BOOK NO. N/A — BASELINE REPORT DATE 14-JUL-2014

NOTE: All material and workmanship shall be in accordance with the current Oregon Standard Specifications

The selection and use of this Standard Drawing, while designed in accordance with generally accepted engineering principles and practices, is the sole responsibility of the user and should not be used without consulting a Registered Professional Engineer.

OREGON STANDARD DRAWINGS

PIPE TO MANHOLE CONNECTIONS

2015

DATE	REVISION DESCRIPTION

Effective Date: June 1, 2016 - November 30, 2016 RD345

rd345.dgn 14-JUL-2014

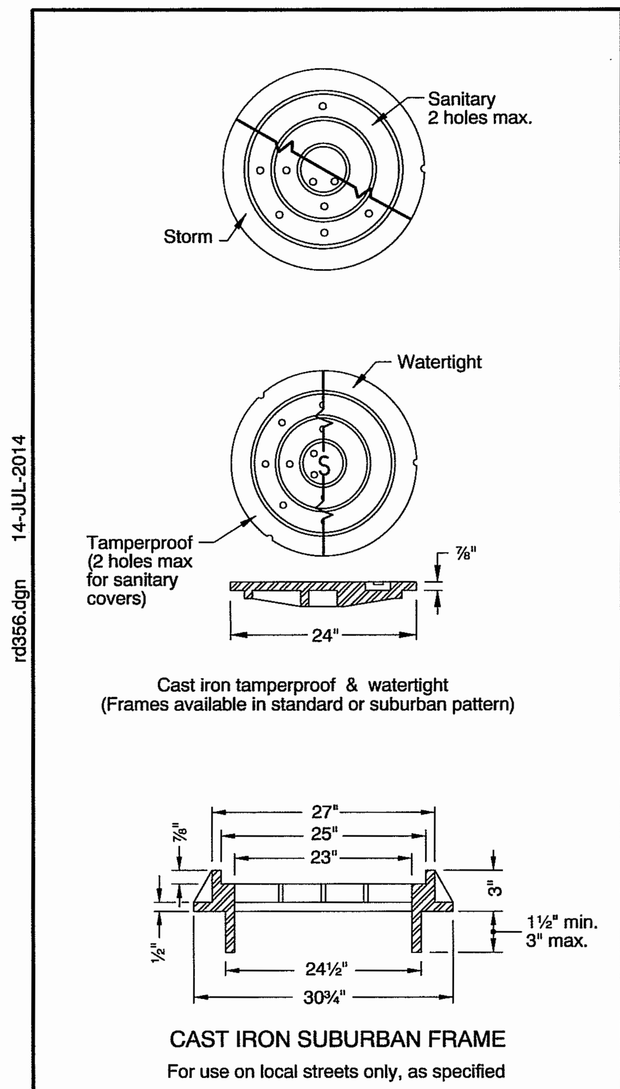

CAST IRON SUBURBAN FRAME
For use on local streets only, as specified

SUBURBAN MANHOLE COVER & FRAME

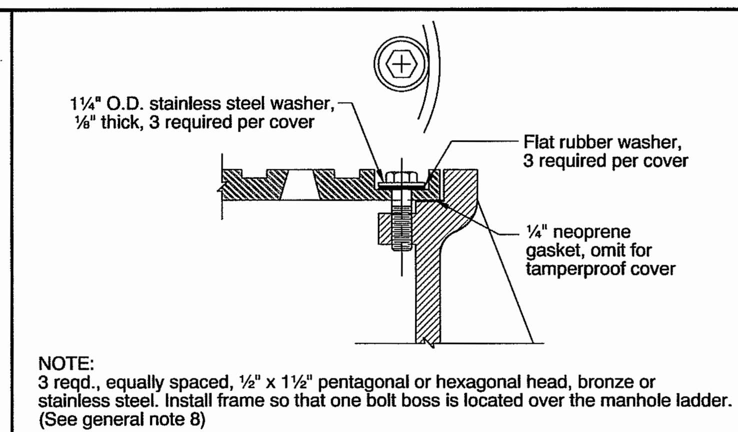

BOLT-DOWN DETAIL
(FOR TAMPERPROOF AND WATERTIGHT)

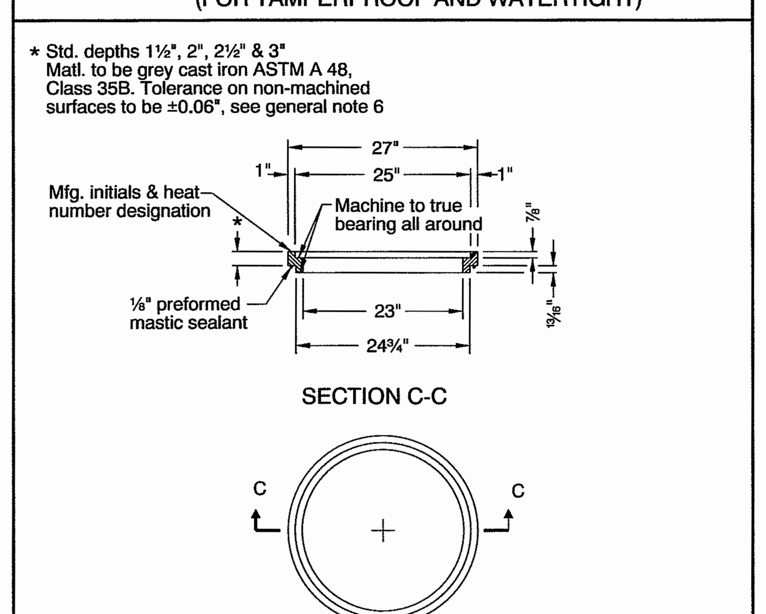

MANHOLE ADJUSTMENT RING
For use with Standard Manhole Frame

STANDARD MANHOLE COVER, FRAME & GRATE

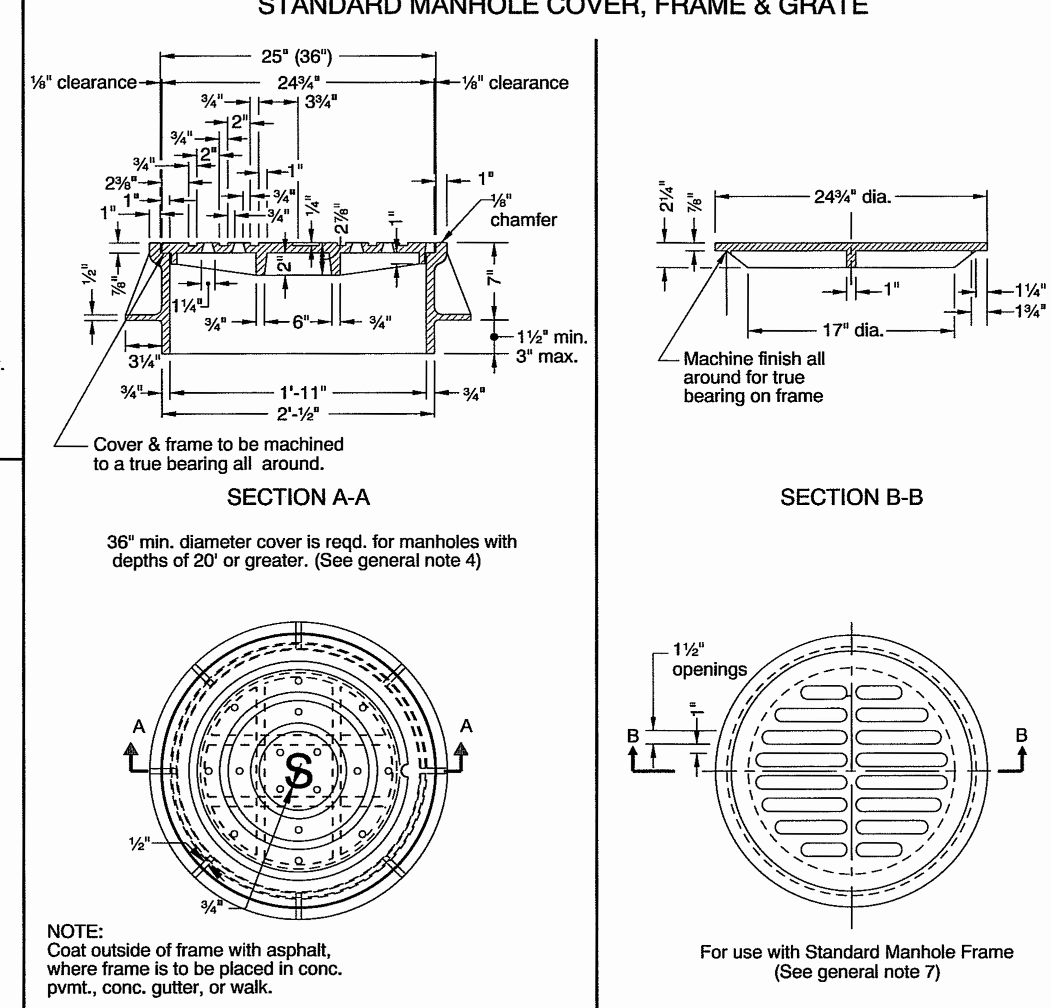

PLAN
MANHOLE COVER & FRAME

PLAN
MANHOLE GRATE

GENERAL NOTES FOR ALL DETAILS:

1. Tamperproof covers reqd. on sanitary or storm drain manhole where located in pedestrian ways or easement areas. Covers for sanitary manholes shall have 2 holes maximum.
2. Watertight covers required if located where cover may be submerged (no holes).
3. Covers and frames shall be stamped with manufacturer's initials, heat number and point of origin.
4. See Std. Drg. RD337 for manhole safety ladder.
5. See Std. Drg. RD360 for manhole frame adjustment.
6. See ODOT's QPL for alternate manhole adjustment rings.
7. Manhole grate allowed only in locations not subject to bicycle or pedestrian use.
8. See ODOT's QPL for alternate bolt-down products.

CALC. BOOK NO. N/A — BASELINE REPORT DATE 14-JUL-2014

NOTE: All material and workmanship shall be in accordance with the current Oregon Standard Specifications

The selection and use of this Standard Drawing, while designed in accordance with generally accepted engineering principles and practices, is the sole responsibility of the user and should not be used without consulting a Registered Professional Engineer.

OREGON STANDARD DRAWINGS

MANHOLE COVERS AND FRAMES

2015

DATE	REVISION DESCRIPTION

Effective Date: June 1, 2016 - November 30, 2016 RD356

rd356.dgn 14-JUL-2014

TAPER TYPES & FORMULAS	
TAPER	**FORMULA**
Merging (Lane Closure)	"L"
Shifting	"L"/2 or ½"L"
Shoulder Closure	"L"/3 or ⅓"L"
Flagging (See Drg. TM850)	50' - 100'
Downstream (Termination)	Varies (See Drawings)

★ Use Pre-Construction Posted Speed to select the Speed from the Tables below:

CONCRETE BARRIER FLARE RATE TABLE	
★ SPEED (mph)	**MINIMUM FLARE RATE**
≤ 30	8:1
35	9:1
40	10:1
45	12:1
50	14:1
55	16:1
60	18:1
65	19:1
70	20:1

MINIMUM LENGTHS TABLE

★ SPEED (mph)	"L" VALUE FOR TAPERS (ft) — W = Lane or Shoulder Width being closed or shifted				BUFFER "B" (ft)
	W ≤ 10	W = 12	W = 14	W = 16	
25	105	125	145	165	75
30	150	180	210	240	100
35	205	245	285	325	125
40	265	320	375	430	150
45	450	540	630	720	180
50	500	600	700	800	210
55	550	660	770	880	250
60	600	720	840	960	285
65	650	780	910	1000	325
70	700	840	980	1000	365
FREEWAYS					
55	1000	1000	1000	1000	250
60	1000	1000	1000	1000	285
65	1000	1000	1000	1000	325
70	1000	1000	1000	1000	365

NOTES:
- For Lane closures where W < 10', use "L" value for W = 10'.
- For Shoulder closures where W < 10', use "L" value for W = 10' or calculate "L" using formula, for Speeds ≥ 45: L = WS, Speeds < 45: L = S²W/60, S = Speed, W=Width

TRAFFIC CONTROL DEVICES (TCD) SPACING TABLE				
★ SPEED (mph)	Sign Spacing (ft) A	Sign Spacing (ft) B	Sign Spacing (ft) C	Max. Channelizing Device Spacing (ft)
20 - 30	100	100	100	20
35 - 40	350	350	350	20
45 - 55	500	500	500	40
60 - 70	700	700	700	40
Freeway	1000	1500	2640	40

NOTES:
- Place traffic control devices on 10 ft. spacing for intersection and access radii.
- When necessary, sign spacing may be adjusted to fit site conditions. Limit spacing adjustments to 20% of the "A" dimension for speeds < 45 mph. Limit spacing adjustments to 10% of the "A" dimension for speeds ≥ 45 mph.

NOTES:
- When paved shoulders adjacent to excavations are less than four feet wide protect longitudinal abrupt edge as shown.
- Use aggregate wedge when abrupt edge is 2 inches or greater.

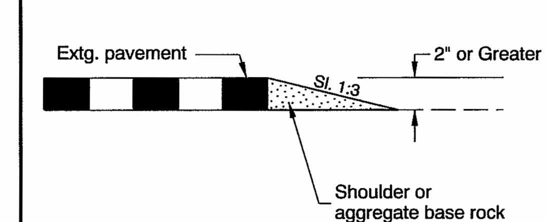

EXCAVATION ABRUPT EDGE

NOTES:
- Install PCMS beyond the outside shoulder, when possible.
- Use the appropriate type of barricade panels for PCMS location. Right shoulder, use Type B(III)R Left shoulder, use Type B(III)L
- Use six drums in shoulder taper on 20' spacing.
- Detail as shown is also used for Portable Traffic Signal installation and Smart Work Zone System.

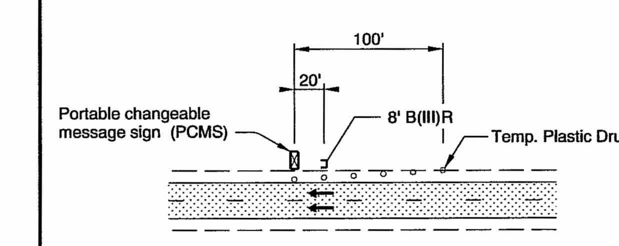

PORTABLE CHANGEABLE MESSAGE SIGN (PCMS) INSTALLATION

NOTES:
- Install Flagger Station Lighting beyond the outside shoulder, where practical.
- Use six tubular markers in shoulder taper on 10' spacing.
- Place cart / generator / power supply off of the shoulder, as far as practical.

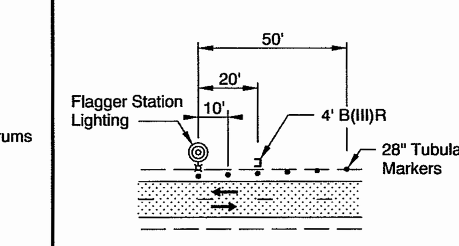

FLAGGER STATION LIGHTING DELINEATION

NOTES:
- Abrupt edges may be created by paving, operations, excavations or other roadway work. Use abrupt edge signing for longitudinal abrupt edges of 1 inch or greater.
- If the excavation is located on left side of traffic, replace the 8' B(III)R barricades with 8' B(III)L barricades and replace the "RIGHT" (CW21-8C) riders with "LEFT" (CW21-8A) riders.
- Continue signing and other traffic control devices throughout excavation area at spacings shown.
- If roll-up signs are used, attach the correct (CW21-9) plaques to the sign face using hook and loop fasteners. Place roll-up signs in advance of barricades.

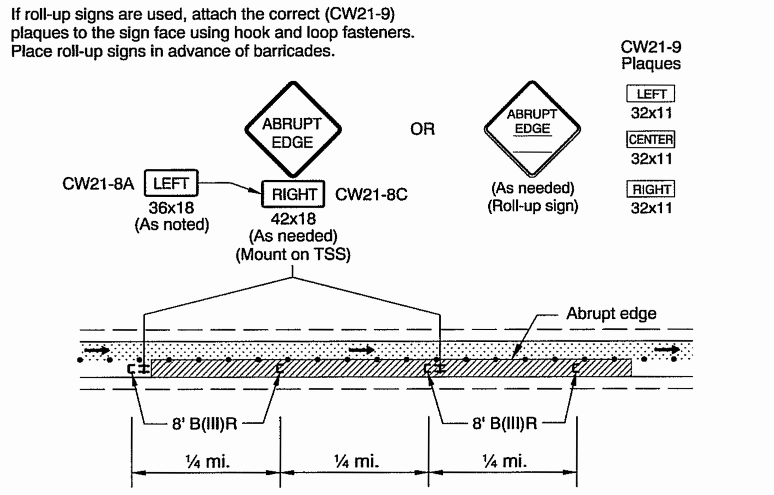

TYPICAL ABRUPT EDGE DELINEATION

GENERAL NOTES FOR ALL TCP DRAWINGS:
- Signs and other Traffic Control Devices (TCD) shown are the minimum required.
- Place a barricade approx. 20' ahead of all sequential arrow boards.
- Arrows shown in roadway are directional arrows to indicate traffic movements.
- All signs are 48" x 48", type "O4" flourescent orange, unless otherwise shown.
- Low speed highways have a pre-construction posted speed of 40 mph or less. High speed highways have a pre-construction posted speed of > 40 mph.
- Do not locate sign supports in locations designated for bicycle or pedestrian traffic.

○ ○ ○ Temp. Plastic Drums See TCD Spacing Table for max. spacing.

• • • 28" Tubular Markers See TCD Spacing Table for max. spacing.

UNDER TRAFFIC

UNDER CONSTRUCTION

To be accompanied by Drg. Nos. TM820 & TM821

CALC. BOOK NO. TM09-01 — BASELINE REPORT DATE 01-JAN-2016

NOTE: All material and workmanship shall be in accordance with the current Oregon Standard Specifications

The selection and use of this Standard Drawing, while designed in accordance with generally accepted engineering principles and practices, is the sole responsibility of the user and should not be used without consulting a Registered Professional Engineer.

OREGON STANDARD DRAWINGS

TABLES, ABRUPT EDGE AND PCMS DETAILS

2015

DATE	REVISION DESCRIPTION
01-01-2015	REVISED DRAWING AND NOTES
07-01-2015	REVISED DRAWING AND NOTES
01-01-2016	REVISED DRAWING AND NOTES

Effective Date: June 1, 2016 - November 30, 2016 TM800

tm800.dgn 01-JAN-2016

REGISTERED PROFESSIONAL ENGINEER #18309PE OREGON JAN. 16, 1996 WILLIAM M. PAVLICH

RENEWS: 12/31/16

BID SET

Revisions and Addendums			
Description	Date	No.	By

PACE An Engineering Services Company
5000 Meadows Road, Suite 345
Lake Oswego, OR 97035
p. 503.597.3222 | f. 503.5975.7655
Civil | Structural | Planning | Survey
paceengrs.com

TIGARD
ENGINEERING DVISION
PUBLIC WORKS DEPARTMENT
13125 S.W. HALL BLVD.
TIGARD, OREGON 97223
VOICE: 503-639-4171
FAX: 503-624-0752
WWW.TIGARD-OR.GOV

DESIGN: WP | DRAWN: MA | CHECK: JS | PROJ. NO: 16819.00 | BID ON:

CANTERBURY LANE STORM SEWER LINE UPGRADE
SW CANTERBURY LANE
MISCELLANEOUS DETAILS

SHEET C10

FILE NO 94033

Plotted by MARK ARGAND on Tuesday, August 02, 2016 at 11:13:43 AM from the DETAILS 3 layout tab
File Name: P16819 - TIGARD - CANTERBURY LANE STORM LINE UPGRADE\CAD\ENGINEERING\SHEETS\P16819DETAILS.DWG